SPECIFICATIONS

HITACHI

KH500-3

HYDRAULIC CRAWLER CRANE

Max. Lifting Capacity: 100 000kg (220500lb) at 5.5m (18′ 1″)

Dimensions

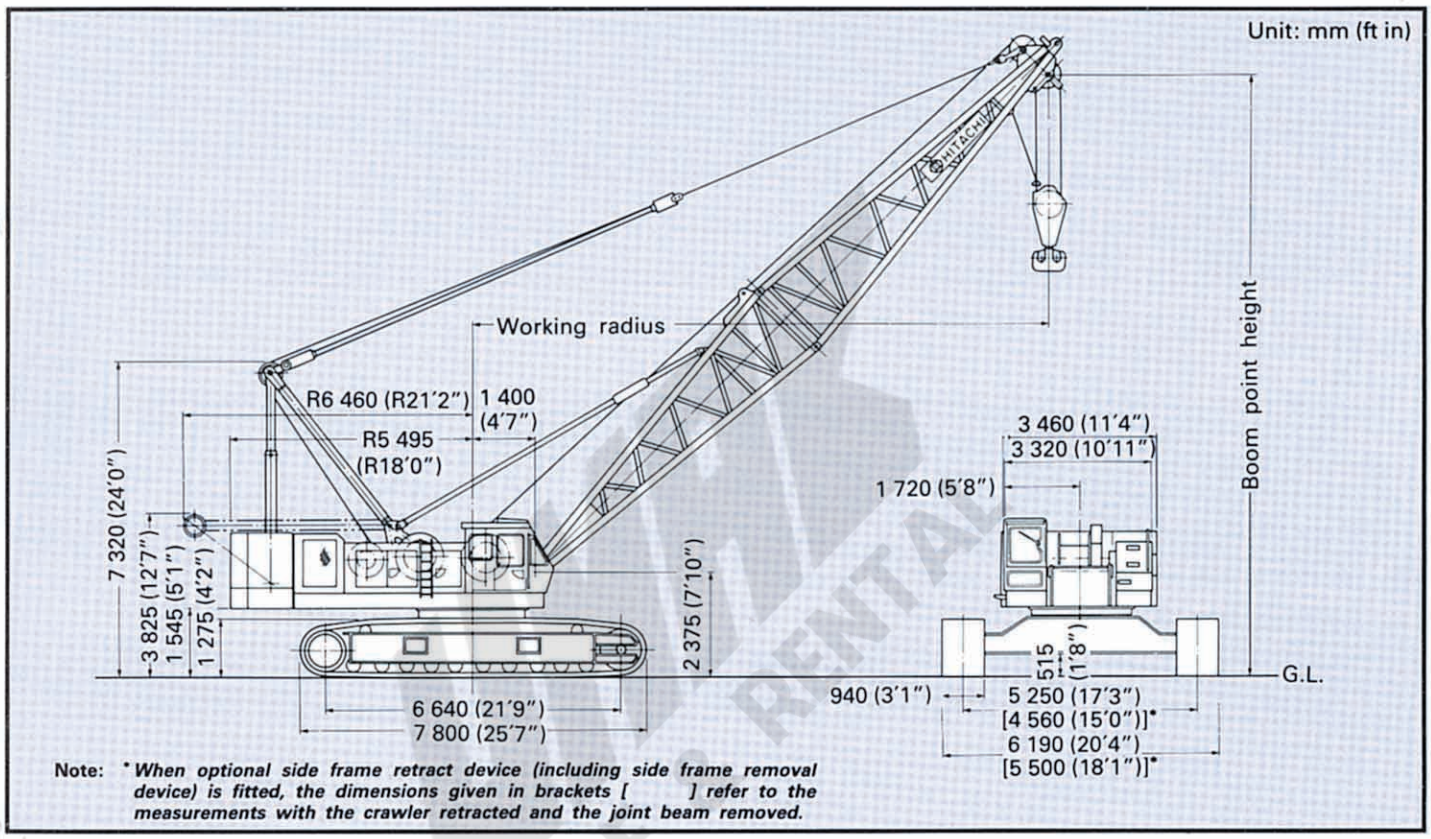

Note: **When optional side frame retract device (including side frame removal device) is fitted, the dimensions given in brackets [ ] refer to the measurements with the crawler retracted and the joint beam removed.*

Specifications

Maximum rated load			100 000 kg (220 500 lb) at 5.5 m (18′1″) working radius
Boom	Basic boom length		16.0 m (52′6″)
	Max. boom length		73.0 m (239′6″)
	Jib length		9.0 m (29′6″) to 22.5 m (73′10″)
	Max. boom with jib length		83.5 m (273′11″) [61.0 m (200′2″) + 22.5 m (73′10″)]
Swing speed		High	0 to 2.3 min^{-1} (0 to 2.3 rpm)
		Low	0 to 1.4 mm^{-1} (0 to 1.4 rpm)
Travel speed*		High	0 to 1.3 km/h (0 to 0.81 mph)
		Low	0 to 0.9 km/h (0 to 0.56 mph)
Gradeability			17° (30%)
Ground pressure			0.77 bar (0.77 kgf/cm^2, 10.9 psi)
Operating weight	Equipped with basic boom, 100 000 kg (220 500 lb) capacity hook and 33 400 kg (73 600 lb) counterweight		103 000 kg (227 100 lb)
Engine	Model		ISUZU 6RB1T
	Rated horsepower		206 kW (280 PS) at 2 000 min^{-1} (2 000 rpm)

**Speeds may vary with load*

HOOKS

Capacity	Weight	Number of hoist reeving and maximum rated loads kg (lb)									
		8	7	6	5	4	3	2	1		
100 000 kg (220 500 lb)	1 400 kg (3 090 lb)	100 000 (220 500)	87 500 (192 900)	75 000 (165 300)	62 500 (137 800)	50 000 (110 200)	37 500 (82 670)	25 000 (55 120)		For main boom	Standard
60 000 kg (132 300 lb)	950 kg (2 090 lb)				60 000 (132 300)	50 000 (110 200)	37 500 (82 670)	25 000 (55 120)			Optional
25 000 kg (55 120 lb)	730 kg (1 610 lb)							25 000 (55 120)			
10 000 kg (22 050 lb)	370 kg (816 lb)								10 000 (22 050)	For Jib or aux. jib	

DRUMS

Dimensions

		Rope dia.	Width	Drum p.c.d.	Rope capacity
Standard winches	Main hoist drum	28 mm (1.10")	575 mm (22.6")	590 mm (23.2")	361 mm (1 184')
	Aux. hoist drum	28 mm (1.10")	575 mm (22.6")	590 mm (23.2")	361 mm (1 184')
Optional winches*	Main hoist drum	30 mm (1.18")	555 mm (21.9")	600 mm (23.6")	333 mm (1 093')
	Aux. hoist drum	30 mm (1.18")	555 mm (21.9")	600 mm (23.6")	333 mm (1 093')

Note: * ***Optional winches are used mainly for clamshell and dragline.***

Line speed and line pull

		Max. line speed m/min (ft/min)		Effective line pull @ Line speed		Max. starting line pull	Max. running line pull
		Hoisting	Lowering				
Standard winches	Main hoist drum	65 (213)	65 (213)	184 kN (18 800 kgf) (41 400 lbf)	32 m/min (105 ft/min)	221 kN (22 500 kgf) (49 600 lbf)	245 kN (25 000 kgf) (55 100 lbf)
	Aux. hoist drum	65 (213)	65 (213)	184 kN (18 800 kgf) (41 400 lbf)	32 m/min (105 ft/min)	221 kN (22 500 kgf) (49 600 lbf)	245 kN (25 000 kgf) (55 100 lbf)
Optional winches	Main hoist drum	65 (213)	65 (213)	181 kN (18 500 kgf) (40 800 lbf)	33 m/min (108 ft/min)	217 kN (22 100 kgf) (48 700 lbf)	241 kN (24 600 kgf) (54 200 lbf)
	Aux. hoist drum	65 (213)	65 (213)	181 kN (18 500 kgf) (40 800 lbf)	32 m/min (105 ft/min)	217 kN (22 100 kgf) (48 700 lbf)	241 kN (24 600 kgf) (54 200 lbf)

NOTES:

1. Line speed and line pull are based on first layer of winding at rated engine rpm.
2. Hoisting line speed varies with load.
3. Line pull is based on a single line pull in high speed range.
4. Effective line pull is equivalent to available line pull of mechanical drive winch.
5. When hydraulic motor starts, since it is not rotating line pull is "Max. starting line pull". After motor rotating, the line pull becomes "Max. running line pull" shortly.

BOOM HOIST DRUM

Rope diameter	Hoisting line speed	Lowering line speed
22 mm (0.87")	52 m/min (171 ft/min)	52 m/min (171 ft/min)

Working Ranges

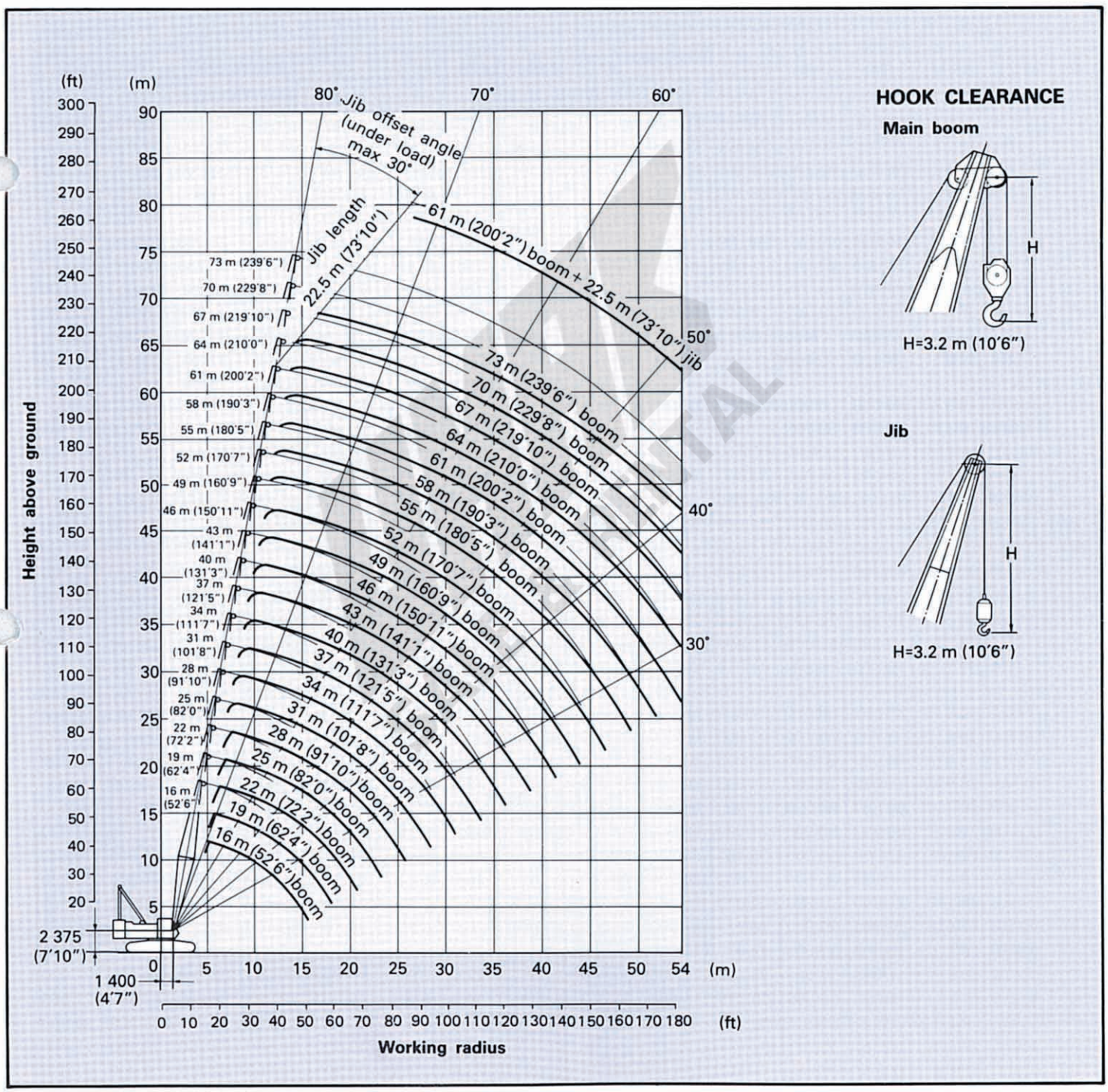

HOOK CLEARANCE

Main boom

H=3.2 m (10'6")

Jib

H=3.2 m (10'6")

Crane Ratings

JIS Rating:
The rated loads shown don't exceed 78% of tipping loads with the machine on firm level ground.

BS Rating:
The rated loads are determined according to BS (British Standard; 1981) on the condition that the machine is stationed on firm, level ground.

PCSA Rating:
The rated loads listed are determined according to PCSA (Power Crane and Shovel Association in U.S.A.) and do not exceed 75% of tipping load on condition that the machine is stationed on firm, level ground.

Tubular Chord Crane Boom in 360° Working Area

Boom length	Working radius		Rated load				
			JIS rating	BS rating		PCSA rating	
m(ft in)	m	ft in	kg	kg	lb	kg	lb
16.0 (52'6")	4.6	15'1"	100 000	100 000	220 500	100 000	220 500
	5.0	16'5"	100 000	100 000	220 500	100 000	220 500
	5.5	18'1"	100 000	100 000	220 500	100 000	220 500
	6.0	19'8"	91 600	91 600	201 900	91 000	200 600
	6.5	21'4"	83 200	83 200	183 400	81 600	179 900
	7.0	23'0"	75 000	75 000	165 300	72 100	159 000
	8.0	26'3"	60 600	60 600	133 600	58 200	128 300
	9.0	29'6"	50 600	50 600	111 600	48 700	107 400
	10.0	32'10"	43 400	43 400	95 680	41 800	92 150
	12.0	39'4"	33 700	33 700	74 300	32 400	71 430
	14.0	45'11"	27 400	27 400	60 410	26 400	58 200
	15.4	50'6"	22 100	22 100	48 720	22 100	48 720
19.0 (62'4")	5.1	16'9"	100 000	100 000	220 500	100 000	220 500
	5.5	18'1"	98 700	98 700	217 600	98 700	217 600
	6.0	19'8"	90 800	90 800	200 200	90 200	198 900
	6.5	21'4"	83 000	83 000	183 000	81 600	179 900
	7.0	23'0"	75 100	75 100	165 600	72 100	159 000
	8.0	26'3"	60 600	60 600	133 600	58 200	128 300
	9.0	29'6"	50 600	50 600	111 600	48 700	107 400
	10.0	32'10"	43 400	43 400	95 680	41 800	92 150
	12.0	39'4"	33 700	33 700	74 300	32 400	71 430
	14.0	45'11"	27 400	27 400	60 410	26 300	57 980
	16.0	52'6"	22 900	22 900	50 490	22 100	48 720
	18.0	59'1"	18 600	18 600	41 010	18 600	41 010
22.0 (72'2")	5.7	18'8"	88 100	88 100	194 200	88 100	194 200
	6.0	19'8"	86 200	86 200	190 000	85 700	188 900
	6.5	21'4"	83 000	83 000	183 000	81 600	179 900
	7.0	23'0"	75 000	75 000	165 300	72 100	159 000
	8.0	26'3"	60 500	60 500	133 400	58 200	128 300
	9.0	29'6"	50 600	50 600	111 600	48 600	107 100
	10.0	32'10"	43 300	43 300	95 460	41 700	91 930
	12.0	39'4"	33 500	33 500	73 850	32 300	71 210
	14.0	45'11"	27 200	27 200	59 970	26 200	57 760
	16.0	52'6"	22 800	22 800	50 270	21 900	48 280
	18.0	59'1"	19 500	19 500	42 990	18 800	41 450
	20.0	65'7"	17 000	17 000	37 480	16 400	36 160
	20.6	67'7"	16 000	16 000	35 270	15 800	34 830

Boom length	Working radius		Rated load				
			JIS rating	BS rating		PCSA rating	
m(ft in)	m	ft in	kg	kg	lb	kg	lb
25.0 (82'0")	6.2	20'4"	78 000	78 000	172 000	78 000	172 000
	6.5	21'4"	76 800	76 800	169 300	75 800	167 100
	7.0	23'0"	74 900	74 900	165 100	72 000	158 700
	8.0	26'3"	60 400	60 400	133 200	58 100	128 100
	9.0	29'6"	50 500	50 500	111 300	48 600	107 100
	10.0	32'10"	43 300	43 300	95 460	41 600	91 710
	12.0	39'4"	33 500	33 500	73 850	32 200	70 990
	14.0	45'11"	27 100	27 100	59 750	26 100	57 540
	16.0	52'6"	22 700	22 700	50 040	21 800	48 060
	18.0	59'1"	19 400	19 400	42 770	18 700	41 230
	20.0	65'7"	16 900	16 900	37 260	16 300	35 940
	22.0	72'2"	14 900	14 900	32 850	14 400	31 750
	23.2	76'1"	13 900	13 900	30 640	13 400	29 540
28.0 (91'10")	6.7	22'0"	68 100	68 100	150 100	68 100	150 100
	7.0	23'0"	66 300	66 300	146 200	65 800	145 100
	8.0	26'3"	60 300	60 300	132 900	58 000	127 900
	9.0	29'6"	50 400	50 400	111 100	48 400	106 700
	10.0	32'10"	43 100	43 100	95 020	41 500	91 490
	12.0	39'4"	33 300	33 300	73 410	32 000	70 550
	14.0	45'11"	27 000	27 000	59 520	25 900	57 100
	16.0	52'6"	22 500	22 500	49 600	21 700	47 840
	18.0	59'1"	19 200	19 200	42 330	18 500	40 790
	20.0	65'7"	16 700	16 700	36 820	16 100	35 490
	22.0	72'2"	14 700	14 700	32 410	14 200	31 310
	24.0	78'9"	13 100	13 100	28 880	12 600	27 780
	25.8	84'8"	11 900	11 900	26 240	11 500	25 350
31.0 (101'8")	7.2	23'7"	59 900	59 900	132 100	59 900	132 100
	8.0	26'3"	55 600	55 600	122 600	54 700	120 600
	9.0	29'6"	50 200	50 200	110 700	48 300	106 500
	10.0	32'10"	43 000	43 000	94 800	41 400	91 270
	12.0	39'4"	33 200	33 200	73 190	31 900	70 330
	14.0	45'11"	26 800	26 800	59 080	25 800	56 880
	16.0	52'6"	22 400	22 400	49 380	21 500	47 400
	18.0	59'1"	19 100	19 100	42 110	18 400	40 570
	20.0	65'7"	16 600	16 600	36 600	16 000	35 270
	22.0	72'2"	14 600	14 600	32 190	14 100	31 090
	24.0	78'9"	13 000	13 000	28 660	12 500	27 560
	26.0	85'4"	11 700	11 700	25 790	11 200	24 690
	28.0	91'10"	10 500	10 500	23 150	10 100	22 270
	28.4	93'2"	10 300	10 300	22 710	9 900	21 830

Boom length	Working radius		Rated load				
			JIS rating	BS rating		PCSA rating	
m(ft in)	m	ft in	kg	kg	lb	kg	lb
34.0 (111'7")	7.7	25'3"	53 400	53 400	117 700	53 400	117 700
	8.0	26'3"	52 700	52 700	116 200	52 200	115 100
	9.0	29'6"	50 100	50 100	110 500	48 200	106 300
	10.0	32'10"	42 900	42 900	94 580	41 200	90 830
	12.0	39'4"	33 000	33 000	72 750	31 800	70 110
	14.0	45'11"	26 700	26 700	58 860	25 700	56 660
	16.0	52'6"	22 200	22 200	48 940	21 400	47 180
	18.0	59'1"	19 000	19 000	41 890	18 200	40 120
	20.0	65'7"	16 400	16 400	36 160	15 800	34 830
	22.0	72'2"	14 400	14 400	31 750	13 900	30 640
	24.0	78'9"	12 800	12 800	28 220	12 300	27 120
	26.0	85'4"	11 500	11 500	25 350	11 000	24 250
	28.0	91'10"	10 400	10 300	22 710	10 000	22 050
	30.0	98'5"	9 400	9 400	20 720	9 000	19 840
	31.0	101'8"	9 000	8 900	19 620	8 600	18 960
37.0 (121'5")	8.3	27'3"	47 100	47 100	103 800	47 100	103 800
	9.0	29'6"	45 200	45 200	99 650	44 600	98 330
	10.0	32'10"	42 700	42 700	94 140	41 100	90 610
	12.0	39'4"	32 900	32 900	72 530	31 600	69 670
	14.0	45'11"	26 500	26 500	58 420	25 500	56 220
	16.0	52'6"	22 100	22 100	48 720	21 300	46 960
	18.0	59'1"	18 800	18 800	41 450	18 100	39 900
	20.0	65'7"	16 300	16 300	35 940	15 700	34 610
	22.0	72'2"	14 300	14 300	31 530	13 700	30 200
	24.0	78'9"	12 700	12 700	28 000	12 200	26 900
	26.0	85'4"	11 300	11 300	24 910	10 900	24 030
	28.0	91'10"	10 200	10 200	22 490	9 800	21 610
	30.0	98'5"	9 200	9 200	20 280	8 900	19 620
	32.0	105'0"	8 400	8 300	18 300	8 100	17 860
	33.6	110'3"	7 800	7 800	17 200	7 500	16 540
40.0 (131'3")	8.8	28'10"	42 400	42 400	93 480	42 400	93 480
	9.0	29'6"	42 100	42 100	92 810	42 100	92 810
	10.0	32'10"	40 800	40 800	89 950	40 800	89 950
	12.0	39'4"	32 800	32 800	72 310	31 500	69 450
	14.0	45'11"	26 400	26 400	58 200	25 400	56 000
	16.0	52'6"	22 000	22 000	48 500	21 100	46 520
	18.0	59'1"	18 700	18 700	41 230	18 000	39 680
	20.0	65'7"	16 100	16 100	35 490	15 500	34 170
	22.0	72'2"	14 100	14 100	31 090	13 600	29 980
	24.0	78'9"	12 500	12 500	27 560	12 000	26 460
	26.0	85'4"	11 200	11 200	24 690	10 800	23 810
	28.0	91'10"	10 100	10 000	22 050	9 700	21 390
	30.0	98'5"	9 100	9 000	19 840	8 800	19 400
	32.0	105'0"	8 300	8 200	18 080	8 000	17 640
	34.0	111'7"	7 600	7 400	16 310	7 300	16 090
	36.0	118'1"	6 900	6 800	14 990	6 700	14 770
	36.2	118'9"	6 900	6 700	14 770	6 600	14 550

Boom length	Working radius		Rated load				
			JIS rating	BS rating		PCSA rating	
m(ft in)	m	ft in	kg	kg	lb	kg	lb
43.0 (141'1")	9.3	30'6"	38 100	38 100	84 000	38 100	84 000
	10.0	32'10"	36 700	36 700	80 910	36 400	80 250
	12.0	39'4"	32 600	32 600	71 870	31 400	69 220
	14.0	45'11"	26 200	26 200	57 760	25 200	55 560
	16.0	52'6"	21 800	21 800	48 060	21 000	46 300
	18.0	59'1"	18 500	18 500	40 790	17 800	39 240
	20.0	65'7"	16 000	16 000	35 270	15 400	33 950
	22.0	72'2"	14 000	14 000	30 860	13 400	29 540
	24.0	78'9"	12 300	12 300	27 120	11 900	26 240
	26.0	85'4"	11 000	11 000	24 250	10 600	23 370
	28.0	91'10"	9 900	9 800	21 610	9 500	20 940
	30.0	98'5"	8 900	8 800	19 400	8 600	18 960
	32.0	105'0"	8 100	8 000	17 640	7 800	17 200
	34.0	111'7"	7 400	7 200	15 870	7 100	15 650
	36.0	118'1"	6 700	6 600	14 550	6 500	14 330
	38.0	124'8"	6 200	6 000	13 230	5 900	13 010
	38.8	127'4"	6 000	5 800	12 790	5 700	12 570
46.0 (150'11")	9.8	32'2"	33 900	33 000	72 750	33 900	74 740
	10.0	32'10"	33 700	32 900	72 530	33 700	74 300
	12.0	39'4"	31 900	31 400	69 220	31 300	69 000
	14.0	45'11"	26 100	26 100	57 540	25 100	55 340
	16.0	52'6"	21 700	21 700	47 840	20 800	45 860
	18.0	59'1"	18 400	18 400	40 570	17 700	39 020
	20.0	65'7"	15 800	15 800	34 830	15 200	33 510
	22.0	72'2"	13 800	13 800	30 420	13 300	29 320
	24.0	78'9"	12 200	12 200	26 900	11 700	25 790
	26.0	85'4"	10 900	10 800	23 810	10 500	23 150
	28.0	91'10"	9 700	9 600	21 160	9 400	20 720
	30.0	98'5"	8 800	8 700	19 180	8 400	18 520
	32.0	105'0"	7 900	7 800	17 200	7 600	16 760
	34.0	111'7"	7 200	7 100	15 650	6 900	15 210
	36.0	118'1"	6 600	6 400	14 110	6 300	13 890
	38.0	124'8"	6 000	5 800	12 790	5 800	12 790
	40.0	131'3"	5 500	5 300	11 680	5 300	11 680
	41.4	135'10"	5 200	5 000	11 020	5 000	11 020
49.0 (160'9")	10.3	33'10"	30 600	28 900	63 710	30 600	67 460
	12.0	39'4"	28 500	27 600	60 850	28 000	61 730
	14.0	45'11"	26 000	26 000	57 320	25 000	55 120
	16.0	52'6"	21 500	21 500	47 400	20 700	45 640
	18.0	59'1"	18 200	18 200	40 120	17 500	38 580
	20.0	65'7"	15 700	15 700	34 610	15 100	33 290
	22.0	72'2"	13 700	13 700	30 200	13 200	29 100
	24.0	78'9"	12 100	12 000	26 460	11 600	25 570
	26.0	85'4"	10 700	10 600	23 370	10 300	22 710
	28.0	91'10"	9 600	9 500	20 940	9 200	20 280
	30.0	98'5"	8 600	8 500	18 740	8 300	18 300
	32.0	105'0"	7 800	7 600	16 760	7 500	16 540
	34.0	111'7"	7 100	6 900	15 210	6 800	14 990
	36.0	118'1"	6 400	6 200	13 670	6 200	13 670
	38.0	124'8"	5 900	5 700	12 570	5 600	12 350
	40.0	131'3"	5 400	5 100	11 240	5 200	11 460
	42.0	137'10"	4 900	4 700	10 360	4 700	10 360
	44.0	144'4"	4 500	4 300	9 480	4 400	9 700

Boom length	Working radius		Rated load				
			JIS rating	BS rating		PCSA rating	
m(ft in)	m	ft in	kg	kg	lb	kg	lb
52.0 (170'7")	10.9	35'9"	27 600	25 200	55 560	27 600	60 850
	12.0	39'4"	26 800	24 400	53 790	26 600	58 640
	14.0	45'11"	25 400	22 800	50 270	24 800	54 670
	16.0	52'6"	21 300	21 300	46 960	20 500	45 190
	18.0	59'1"	18 000	18 000	39 680	17 400	38 360
	20.0	65'7"	15 500	15 500	34 170	14 900	32 850
	22.0	72'2"	13 500	13 500	29 760	13 000	28 660
	24.0	78'9"	11 900	11 800	26 010	11 400	25 130
	26.0	85'4"	10 500	10 400	22 930	10 100	22 270
	28.0	91'10"	9 400	9 300	20 500	9 000	19 840
	30.0	98'5"	8 400	8 300	18 300	8 100	17 860
	32.0	105'0"	7 600	7 400	16 310	7 300	16 090
	34.0	111'7"	6 900	6 700	14 770	6 600	14 550
	36.0	118'1"	6 200	6 000	13 230	6 000	13 230
	38.0	124'8"	5 700	5 400	11 910	5 500	12 130
	40.0	131'3"	5 200	4 900	10 800	5 000	11 020
	42.0	137'10"	4 700	4 500	9 920	4 500	9 920
	44.0	144'4"	4 300	4 100	9 040	4 200	9 260
	46.0	150'11"	3 900	3 700	8 160	3 800	8 380
	46.6	152'11"	3 800	3 600	7 940	3 700	8 160
55.0 (180'5")	11.4	37'5"	25 000	21 600	47 620	25 000	55 120
	12.0	39'4"	24 500	21 200	46 740	24 400	53 790
	14.0	45'11"	22 900	20 100	44 310	22 450	49 490
	16.0	52'6"	21 200	19 000	41 890	20 400	44 970
	18.0	59'1"	17 900	17 900	39 460	17 200	37 920
	20.0	65'7"	15 400	15 400	33 950	14 800	32 630
	22.0	72'2"	13 400	13 300	29 320	12 900	28 440
	24.0	78'9"	11 700	11 700	25 790	11 300	24 910
	26.0	85'4"	10 400	10 300	22 710	10 000	22 050
	28.0	91'10"	9 200	9 100	20 060	8 900	19 620
	30.0	98'5"	8 300	8 100	17 860	8 000	17 640
	32.0	105'0"	7 400	7 300	16 090	7 200	15 870
	34.0	111'7"	6 700	6 500	14 330	6 500	14 330
	36.0	118'1"	6 100	5 900	13 010	5 900	13 010
	38.0	124'8"	5 500	5 300	11 680	5 300	11 680
	40.0	131'3"	5 000	4 800	10 580	4 800	10 580
	42.0	137'10"	4 600	4 300	9 480	4 400	9 700
	44.0	144'4"	4 200	3 900	8 600	4 000	8 820
	46.0	150'11"	3 800	3 500	7 720	3 700	8 160
	48.0	157'6"	3 400	3 200	7 060	3 400	7 500
	49.2	161'5"	3 200	3 000	6 610	3 200	7 060

Boom length	Working radius		Rated load				
			JIS rating	BS rating		PCSA rating	
m(ft in)	m	ft in	kg	kg	lb	kg	lb
58.0 (190'3")	11.9	39'1"	22 000	18 900	41 670	22 000	48 500
	12.0	39'4"	21 900	18 900	41 670	21 900	48 280
	14.0	45'11"	20 700	17 900	39 460	20 700	45 640
	16.0	52'6"	19 700	17 000	37 480	19 700	43 430
	18.0	59'1"	17 800	16 100	35 490	17 100	37 700
	20.0	65'7"	15 200	15 200	33 510	14 600	32 190
	22.0	72'2"	13 200	13 100	28 880	12 700	28 000
	24.0	78'9"	11 600	11 500	25 350	11 100	24 470
	26.0	85'4"	10 200	10 100	22 270	9 800	21 610
	28.0	91'10"	9 100	8 900	19 620	8 700	19 180
	30.0	98'5"	8 100	7 900	17 420	7 800	17 200
	32.0	105'0"	7 300	7 100	15 650	7 000	15 430
	34.0	111'7"	6 600	6 300	13 890	6 300	13 890
	36.0	118'1"	5 900	5 700	12 570	5 700	12 570
	38.0	124'8"	5 400	5 100	11 240	5 200	11 460
	40.0	131'3"	4 900	4 600	10 140	4 700	10 360
	42.0	137'10"	4 400	4 100	9 040	4 200	9 260
	44.0	144'4"	3 900	3 700	8 160	3 900	8 600
	46.0	150'11"	3 500	3 300	7 280	3 500	7 720
	48.0	157'6"	3 100	3 000	6 610	3 100	6 830
	50.0	164'1"	2 800	2 700	5 950	2 800	6 170
	51.8	169'11"	2 500	2 400	5 290	2 500	5 510
61.0 (200'2")	12.4	40'8"	19 500	16 500	36 380	19 500	42 990
	14.0	45'11"	18 700	15 900	35 050	18 700	41 230
	16.0	52'6"	17 700	15 200	33 510	17 700	39 020
	18.0	59'1"	16 800	14 400	31 750	16 800	37 040
	20.0	65'7"	15 000	13 700	30 200	14 500	31 970
	22.0	72'2"	13 000	12 900	28 440	12 500	27 560
	24.0	78'9"	11 400	11 300	24 910	11 000	24 250
	26.0	85'4"	10 000	9 900	21 830	9 700	21 390
	28.0	91'10"	8 900	8 700	19 180	8 600	18 960
	30.0	98'5"	7 900	7 700	16 980	7 600	16 760
	32.0	105'0"	7 100	6 900	15 210	6 800	14 990
	34.0	111'7"	6 400	6 100	13 450	6 100	13 450
	36.0	118'1"	5 700	5 500	12 130	5 500	12 130
	38.0	124'8"	5 200	4 900	10 800	5 000	11 020
	40.0	131'3"	4 700	4 400	9 700	4 500	9 920
	42.0	137'10"	4 200	3 900	8 600	4 100	9 040
	44.0	144'4"	3 700	3 500	7 720	3 700	8 160
	46.0	150'11"	3 300	3 100	6 830	3 300	7 280
	48.0	157'6"	2 900	2 800	6 170	2 900	6 390
	50.0	164'1"	2 500	2 500	5 510	2 500	5 510
	52.0	170'7"	2 200	2 200	4 850	2 200	4 850
	54.0	177'2"	1 900	1 900	4 190	1 900	4 190
	54.4	178'6"	1 900	1 900	4 190	1 900	4 190

Boom length	Working radius		Rated load				
			JIS rating	BS rating		PCSA rating	
m(ft in)	m	ft in	kg	kg	lb	kg	lb
	12.9	42'4"	19 200	16 300	35 940	19 200	42 330
	14.0	45'11"	18 500	15 500	34 170	18 500	40 790
	16.0	52'6"	17 300	15 100	33 290	17 300	38 140
	18.0	59'1"	16 100	14 300	31 530	16 100	35 490
	20.0	65'7"	14 900	13 600	29 980	14 300	31 530
	22.0	72'2"	12 900	12 800	28 220	12 400	27 340
	24.0	78'9"	11 200	11 100	24 470	10 800	23 810
	26.0	85'4"	9 900	9 700	21 390	9 500	20 940
	28.0	91'10"	8 700	8 500	18 740	8 400	18 520
	30.0	98'5"	7 800	7 500	16 540	7 500	16 540
64.0	32.0	105'0"	6 900	6 700	14 770	6 700	14 770
(210'0")	34.0	111'7"	6 200	5 900	13 010	6 000	13 230
	36.0	118'1"	5 600	5 300	11 680	5 400	11 910
	38.0	124'8"	5 000	4 700	10 360	4 800	10 580
	40.0	131'3"	4 500	4 200	9 260	4 300	9 480
	42.0	137'10"	3 900	3 700	8 160	3 900	8 600
	44.0	144'4"	3 500	3 300	7 280	3 500	7 720
	46.0	150'11"	3 000	2 900	6 390	3 000	6 610
	48.0	157'6"	2 600	2 600	5 730	2 600	5 730
	50.0	164'1"	2 300	2 300	5 070	2 300	5 070
	52.0	170'7"	2 000	2 000	4 410	2 000	4 410
	54.0	177'2"	1 700	1 700	3 750	1 700	3 750
	13.5	44'4"	17 300	15 100	33 290	17 300	38 140
	14.0	45'11"	17 000	15 000	33 070	17 000	37 480
	16.0	52'6"	16 300	14 400	31 750	16 100	35 490
	18.0	59'1"	15 600	13 800	30 420	15 100	33 290
	20.0	65'7"	14 700	13 200	29 100	14 200	31 310
	22.0	72'2"	12 700	12 600	27 780	12 200	26 900
	24.0	78'9"	11 100	10 900	24 030	10 700	23 590
	26.0	85'4"	9 700	9 500	20 940	9 400	20 720
	28.0	91'10"	8 600	8 400	18 520	8 300	18 300
	30.0	98'5"	7 600	7 400	16 310	7 300	16 090
67.0	32.0	105'0"	6 800	6 500	14 330	6 500	14 330
(219'10")	34.0	111'7"	6 100	5 800	12 790	5 800	12 790
	36.0	118'1"	5 400	5 100	11 240	5 200	11 460
	38.0	124'8"	4 800	4 500	9 920	4 700	10 360
	40.0	131'3"	4 300	4 000	8 820	4 200	9 260
	42.0	137'10"	3 700	3 500	7 720	3 700	8 160
	44.0	144'4"	3 300	3 100	6 830	3 300	7 280
	46.0	150'11"	2 800	2 700	5 950	2 800	6 170
	48.0	157'6"	2 400	2 400	5 290	2 400	5 290
	50.0	164'1"	2 100	2 100	4 630	2 100	4 630
	52.0	170'7"	1 800	1 800	3 970	1 800	3 970
	54.0	177'2"	1 500	1 500	3 310	1 500	3 310

Boom length	Working radius		Rated load				
			JIS rating	BS rating		PCSA rating	
m(ft in)	m	ft in	kg	kg	lb	kg	lb
	14.0	45'11"	15 500	13 400	29 540	15 500	34 170
	16.0	52'6"	14 700	12 800	28 220	14 700	32 410
	18.0	59'1"	14 000	12 300	27 120	13 800	30 420
	20.0	65'7"	13 300	11 800	26 010	13 000	28 660
	22.0	72'2"	12 500	11 200	24 690	12 100	26 680
	24.0	78'9"	10 900	10 700	23 590	10 500	23 150
	26.0	85'4"	9 500	9 300	20 500	9 200	20 280
	28.0	91'10"	8 400	8 100	17 860	8 100	17 860
	30.0	98'5"	7 400	7 100	15 650	7 100	15 650
70.0	32.0	105'0"	6 600	6 300	13 890	6 300	13 890
(229'8")	34.0	111'7"	5 900	5 500	12 130	5 600	12 350
	36.0	118'1"	5 200	4 900	10 800	5 000	11 020
	38.0	124'8"	4 600	4 300	9 480	4 500	9 920
	40.0	131'3"	4 000	3 800	8 380	4 000	8 820
	42.0	137'10"	3 500	3 300	7 280	3 500	7 720
	44.0	144'4"	3 000	2 900	6 390	3 000	6 610
	46.0	150'11"	2 600	2 500	5 510	2 600	5 730
	48.0	157'6"	2 200	2 200	4 850	2 200	4 850
	50.0	164'1"	1 800	1 800	3 970	1 800	3 970
	52.0	170'7"	1 500	1 500	3 310	1 500	3 310
	14.5	47'7"	13 800	11 700	25 790	13 800	30 420
	16.0	52'6"	13 300	11 400	25 130	13 300	29 320
	18.0	59'1"	12 600	10 900	24 030	12 500	27 560
	20.0	65'7"	12 000	10 500	23 150	11 800	26 010
	22.0	72'2"	11 300	10 000	22 050	11 100	24 470
	24.0	78'9"	10 600	9 600	21 160	10 300	22 710
	26.0	85'4"	9 300	9 100	20 060	9 000	19 840
	28.0	91'10"	8 200	7 900	17 420	7 900	17 420
	30.0	98'5"	7 200	6 900	15 210	6 900	15 210
73.0	32.0	105'0"	6 400	6 100	13 450	6 100	13 450
(239'6")	34.0	111'7"	5 600	5 300	11 680	5 400	11 910
	36.0	118'1"	5 000	4 600	10 140	4 800	10 580
	38.0	124'8"	4 300	4 100	9 040	4 300	9 480
	40.0	131'3"	3 700	3 500	7 720	3 700	8 160
	42.0	137'10"	3 200	3 100	6 830	3 200	7 060
	44.0	144'4"	2 700	2 700	5 950	2 700	5 950
	46.0	150'11"	2 300	2 300	5 070	2 300	5 070
	48.0	157'6"	1 900	1 900	4 190	1 900	4 190
	50.0	164'1"	1 500	1 500	3 310	1 500	3 310

Rated Load for Main Boom

Notes:

1. The rated loads shown are based on the machine on firm level ground without traveling.
2. The rated loads shown include the weight of all lifting attachments such as hook, bucket, etc. The load to be actually lifted will be the rated load minus the weight of all lifting attachments.
3. The rated load for auxiliary jib hook is equal to that of main hook at the same working radius, but do not exceed maximum rated load 10 000 kg (22 040 lb)
4. When the jib boom is attached to the main boom, the load to be actually lifted will be the rated load minus weight of jib boom.

Jib length	9.0 m (29'6")	13.5 m (44'4")	18.0 m (59'1")	22.5 m (73'10")
Jib weight	1 350 kg (2 980 lb)	1 650 kg (3 640 lb)	1 950 kg (4 300 lb)	2 250 kg (4 960 lb)

5. When the auxiliary jib is attached to the main boom, the load to be actually lifted is the rated load minus auxiliary jib weight.
   Auxiliary jib weight .....350 kg (770 lb)
6. The jib can be attached to boom of 40 m (131'3") to 64 m (210'0") long. In case of 64 m (210'0") boom, the maximum jib length is 13.5 m (44'4") long.
7. The auxiliary jib can be attached to the main boom of 16 m (52'6") to 67 m (219'10") long.
8. Counterweight is 33 400 kg (73 600 lb).

Rated Load for Jib

Maximum jib rating

Jib length / Jib offset angle		9.0 m (29'6")	13.5 m (44'4")	18.0 m (59'1")	22.5 m (73'10")
Max. rated load	10°	1 000 kg (2 210 lb)	1 000 kg (2 210 lb)	5 950 kg (13 120 lb)	3 500 kg (7 720 lb)
	30°	9 300 kg (20 500 lb)	5 700 kg (12 570 lb)	4 000 kg (8 820 lb)	2 500 kg (5 510 lb)

Notes:

1. The rated load for jib is equal to that of the main boom at the same working radius, but should not exceed maximum jib ratings shown. The jib offset angle to the main boom is under loaded condition.
2. The maximum working radius of the jib do not exceed that of the main boom used.

SALE & RENTAL

Main Boom & Jib Construction

Main Boom Construction

Boom Length / Element	16.0 m (52'6")	19.0 m (62'4")	22.0 m (72'2")	25.0 m (82'0")	28.0 m (91'10")	31.0 m (101'8")	34.0 m (111'7")	37.0 m (121'5")	40.0 m (131'3")	43.0 m (141'1")	46.0 m (150'11")	49.0 m (160'9")	52.0 m (170'7")	55.0 m (180'5")	58.0 m (190'3")	61.0 m (200'2")	64.0 m (210'0")	67.0 m (219'10")	70.0 m (229'8")	73.0 m (239'6")
Lower 8.0 m (26'3")	1	1	1	1	1	1	1	1	1	1	1	1	1	1	1	1	1	1	1	1
Upper 8.0 m (26'3")	1	1	1	1	1	1	1	1	1	1	1	1	1	1	1	1	1	1	1	1
Insert 3.0 m (9'10")	–	1	2	1	2	1	2	2	1	2	2	1	2	2	1	2	2	1	2	3
Insert 6.0 m (19'8")	–	–	–	1	1	2	2	1	2	2	1	2	2	1	2	2	1	2	2	2
Insert A 9.0 m (29'6")	–	–	–	–	–	–	–	1	1	1	2	2	2	3	3	3	3	3	3	3
Insert B 9.0 m (29'6")	–	–	–	–	–	–	–	–	–	–	–	–	–	–	–	–	1	1	1	1
Available hook	100 000 kg (220 400 lb) capacity hook																			
	60 000 kg (132 000 lb) capacity hook																			
	25 000 kg (55 100 lb) capacity hook																			
Attachable Jib	9.0 m(29'6") Jib																			
	13.5 m(44'4") Jib																			
	18.0 m(59'1") Jib																			
	22.5 m(73'10") Jib																			
Auxiliary Jib (Optional)																				

Jib Construction

Element \ Jib length	9.0 m (29'6")	13.5 m (44'4")	18.0 m (59'1")	22.5 m (73'10")
Lower 4.5 m (14'9")	1	1	1	1
Upper 4.5 m (14'9")	1	1	1	1
Insert 4.5 m (14'9")	–	1	2	3
Number of rope reevings	1	1	1	1
Available hook	10 000 kg (22 040 lb) capacity hook			

Auxiliary Jib (Optional)

Attachable to main boom top for hoisting light-weight load quickly with a single rope used. (Never use the main and auxiliary hooks at the same time.)

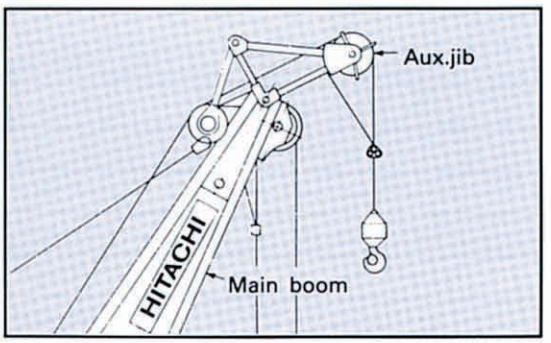

SAIKI RENTAL

CLAMSHELL
With Tubular CRANE Boom

Dimensions

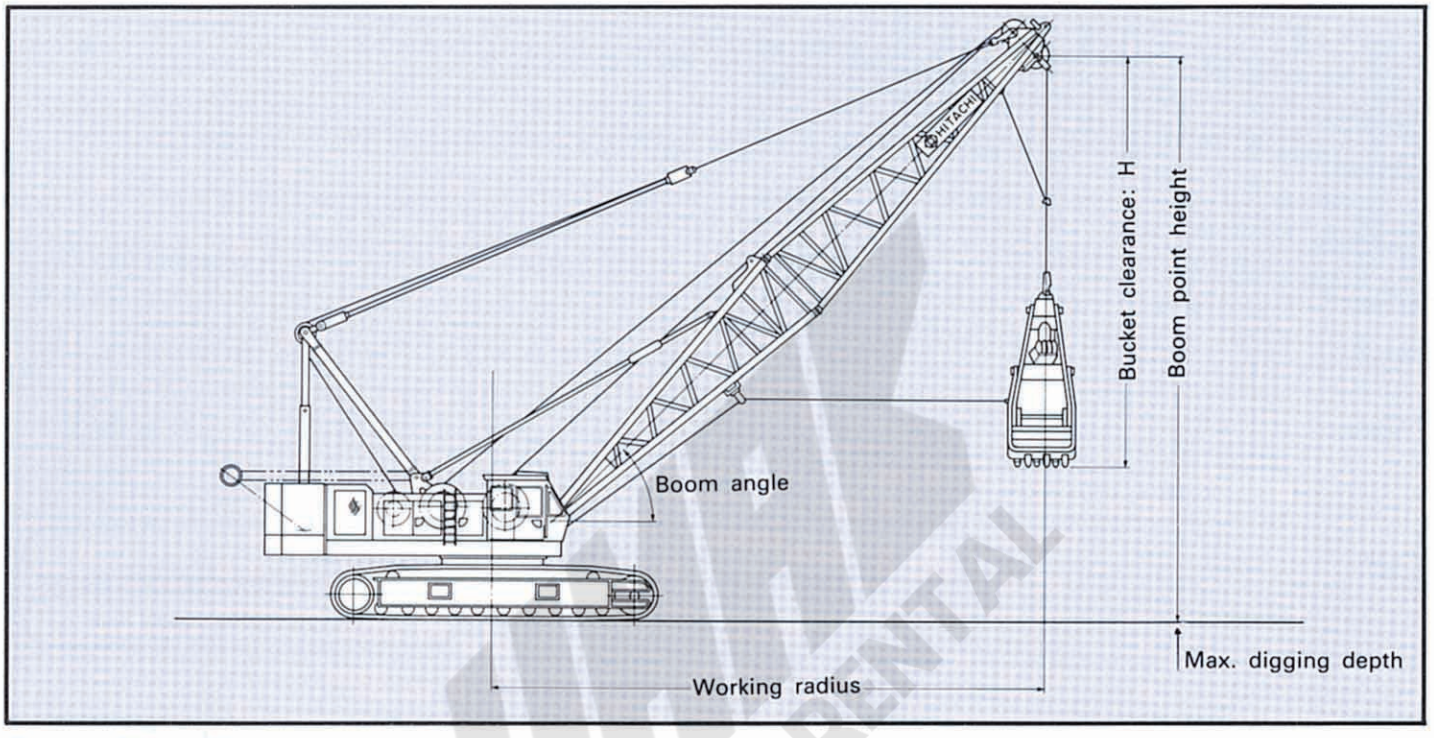

Specifications

	Standard winch	Optional winch
Max. rated load	12 000 kg (26 460 lb)	13 500 kg (29 760 lb)
Bucket capacity	3.0m³ (3.9 cu yd) to 6.0 m³ (7.8 cu yd)	3.5 m³ (4.6 cu yd) to 7.0 m³ (9.2 cu yd)
Boom length	16.0 m (52'6") to 28.0 m (91'10")	
Ground pressure	0.81 bar (0.81 kgf/cm², 11.5 psi)	0.82 bar (0.82 kgf/cm², 11.7 psi)
Operating weight	108 000 kg (238 100 lb) When equipped with 16.0 m (52'6") boom and 3.0 m³ (3.9 cu yd) bucket	109 000 kg (240 300 lb) When equipped with 16.0 m (52'6") boom and 3.5 m³ (4.6 cu yd) bucket

The other specfications such as engine horsepower, drum data, swing speed, travel speed, etc. are same as crane basic machine. See page 1—2.

BUCKETS

Capacity	Self weight	Bucket clearance: H	Application
3.0 m³ (3.9cu yd)	6 500 kg (14 300 lb)	7.3 m (23'11")	General purpose
3.5 m³ (4.6cu yd)	7 200 kg (15 900 lb)	7.6 m (24'11")	
4.0 m³ (5.2cu yd)	6 300 kg (13 900 lb)	6.9 m (22'8")	For gravel
4.5 m³ (5.9cu yd)	6 700 kg (14 800 lb)	7.2 m (23'7")	
6.0 m³ (7.8cu yd)	5 100 kg (11 200 lb)	6.9 m (22'8")	For coal loading
7.0 m³ (9.2cu yd)	5 700 kg (12 600 lb)	7.3 m (23'11")	

For optional winch

TAGLINE

	Maximum digging depth
Hydraulic operated type	36.0 m (118'1")

Clamshell Ratings and Working Ranges

Boom length	Working radius		Boom angle	Boom point height		Rated load					
						Standard winches			Optional winches		
m (ft in)	m	ft in	degree	m	ft in	JIS	BS	PCSA	JIS	BS	PCSA
						kg	kg (lb)	kg (lb)	kg	kg (lb)	kg (lb)
16.0 (52'6")	15.0	49'3"	35	11.2	36'9"	12 000	12 000 (26 460)	12 000 (26 460)	13 500	13 500 (29 760)	13 500 (29 760)
	13.3	43'8"	45	13.4	44'0"	12 000	12 000 (26 460)	12 000 (26 460)	13 500	13 500 (29 760)	13 500 (29 760)
	11.2	36'9"	55	15.3	50'2"	12 000	12 000 (26 460)	12 000 (26 460)	13 500	13 500 (29 760)	13 500 (29 760)
	8.8	28'10"	65	16.7	54'9"	12 000	12 000 (26 460)	12 000 (26 460)	13 500	13 500 (29 760)	13 500 (29 760)
19.0 (62'4")	17.5	57'5"	35	12.9	42'4"	12 000	12 000 (26 460)	12 000 (26 460)	13 500	13 500 (29 760)	13 500 (29 760)
	15.4	50'6"	45	15.5	50'10	12 000	12 000 (26 460)	12 000 (26 460)	13 500	13 500 (29 760)	13 500 (29 760)
	12.9	42'4"	55	17.7	58'1"	12 000	12 000 (26 460)	12 000 (26 460)	13 500	13 500 (29 760)	13 500 (29 760)
	10.1	33'2"	65	19.4	63'8"	12 000	12 000 (26 460)	12 000 (26 460)	13 500	13 500 (29 760)	13 500 (29 760)
22.0 (72'2")	20.0	65'7"	35	14.7	48'3"	12 000	12 000 (26 460)	12 000 (26 460)	13 500	13 500 (29 760)	13 500 (29 760)
	17.5	57'5"	45	17.6	57'9"	12 000	12 000 (26 460)	12 000 (26 460)	13 500	13 500 (29 760)	13 500 (29 760)
	14.6	47'11"	55	20.2	66'3"	12 000	12 000 (26 460)	12 000 (26 460)	13 500	13 500 (29 760)	13 500 (29 760)
	11.4	37'5"	65	22.1	72'6"	12 000	12 000 (26 460)	12 000 (26 460)	13 500	13 500 (29 760)	13 500 (29 760)
25.0 (82'0")	22.4	73'6"	35	16.4	53'10	12 000	11 700 (25 790)	12 000 (26 460)	13 500	11 700 (25 790)	12 700 (28 000)
	19.7	64'8"	45	19.8	65'0"	12 000	12 000 (26 460)	12 000 (26 460)	13 500	13 500 (29 760)	13 500 (29 760)
	16.4	53'10"	55	22.6	74'2"	12 000	12 000 (26 460)	12 000 (26 460)	13 500	13 500 (29 760)	13 500 (29 760)
	12.6	41'4"	65	24.9	81'8"	12 000	12 000 (26 460)	12 000 (26 460)	13 500	13 500 (29 760)	13 500 (29 760)
28.0 (91'10")	24.9	81'8"	35	18.1	59'5"	10 700	10 000 (22 050)	10 900 (24 030)	10 700	10 000 (22 050)	10 900 (24 030)
	21.8	71'6"	45	21.9	71'10	12 000	11 800 (26 010)	12 000 (26 460)	13 400	12 000 (26 460)	13 000 (28 660)
	18.1	59'5"	55	25.1	82'4"	12 000	12 000 (26 460)	12 000 (26 460)	13 500	13 500 (29 760)	13 500 (29 760)
	13.9	45'7"	65	27.6	90'7"	12 000	12 000 (26 460)	12 000 (26 460)	13 500	13 500 (29 760)	13 500 (29 760)

Notes:

1. The rated loads shown include the bucket weight. The load to be actually lifted is the rated load minus bucket weight.
2. Counterweight is 33 400 kg (73 600 lb).
3. Allowable boom length for clamshell operation is from 16.0 m (52'6") through 28.0 m (91'10").

TOWER CRANE
With Tubular TOWER Boom

Working Ranges (90° Tower Angle)

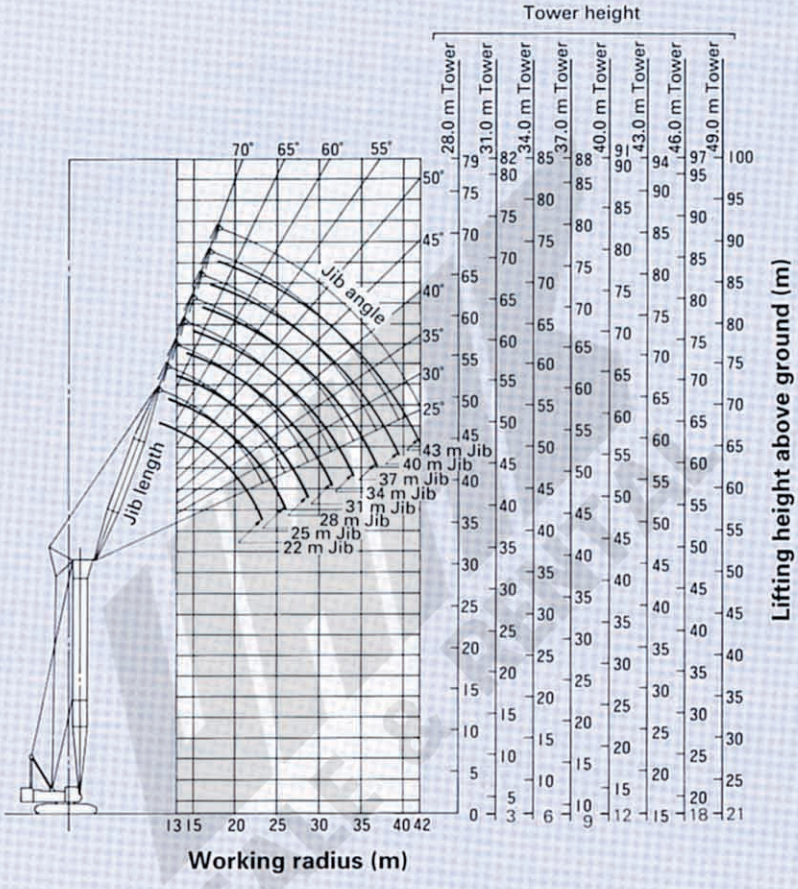

Working ranges are under no-load conditions.

Specifications

Maximum rated load		20 000 kg (44 090 lb) at 14.0 m (45'11") working radius
Tower boom length		28 m (91'10") to 49 m (160'9")
Jib length		22 m (72'2") to 43 m (141'1")
Max. tower boom + Jib boom		49 m (160'9") + 43 m (141'1")
Working radius*1		13 m (42'8") to 42 m (137'10")
Maximum lifting height above ground		88 m (288'9")
Ground pressure		0.86 bar (0.86 kg/cm², 15.0 psi)
Operating weight	Equipped with 49 m (160'9") tower boom, 43 m (141'1") jib, 25 000 kg (55 120 lb) capacity hook and 33 400 kg (73 600 lb) counterweight	114 000 kg (251 300 lb)

Notes: *1 With the load being lifted.
For common specifications which are not listed above, refer to P.1 and P.2.

JIS Rating:
The rated loads shown don't exceed 78% of tipping loads with the machine on firm, level ground.

PCSA Rating:
The rated loads, listed are determined according to PCSA (Power Crane and Shovel Association in U.S.A.) and do not exceed 75% of tipping load on condition that the machine is stationed on firm, level ground.

Rated Load (90° Tower Angle)

Tower length	Jib length	Working radius		Rated load		
				JIS rating	PCSA rating	
m (ft in)	m (ft in)	m	ft in	kg	kg	lb
28.0 (91'10")	22.0 (72'2")	13.0	42'8"	20 000	20 000	44 090
		14.0	45'11"	20 000	20 000	44 090
		15.0	49'3"	17 050	17 050	37 580
		16.0	52'6"	15 600	15 600	34 390
		18.0	59'1"	13 500	13 500	29 760
		20.0	65'7"	11 900	11 900	26 230
		22.0	72'2"	10 600	10 600	23 360
		23.2	76'1"	10 000	10 000	22 040
31.0 (101'8")	22.0 (72'2")	13.0	42'8"	20 000	20 000	44 090
		14.0	45'11"	20 000	20 000	44 090
		15.0	49'3"	17 050	17 050	37 580
		16.0	52'6"	15 600	15 600	34 390
		18.0	59'1"	13 500	13 500	29 760
		20.0	65'7"	11 900	11 900	26 230
		22.0	72'2"	10 600	10 600	23 360
		23.2	76'1"	10 000	10 000	22 040
	25.0 (82'0")	14.0	45'11"	18 600	18 600	41 000
		15.0	49'3"	17 000	17 000	37 470
		16.0	52'6"	15 600	15 600	34 390
		18.0	59'1"	13 500	13 500	29 760
		20.0	65'7"	11 900	11 900	26 230
		22.0	72'2"	10 600	10 600	23 360
		24.0	78'9"	9 600	9 600	21 160
		25.9	85'0"	8 850	8 850	19 510
34.0 (111'7")	22.0 (72'2")	13.0	42'8"	20 000	20 000	44 090
		14.0	45'11"	20 000	20 000	44 090
		15.0	49'3"	17 050	17 050	37 580
		16.0	52'6"	15 600	15 600	34 390
		18.0	59'1"	13 500	13 500	29 760
		20.0	65'7"	11 900	11 900	26 230
		22.0	72'2"	10 600	10 600	23 360
		23.2	76'1"	10 000	10 000	22 040
	25.0 (82'0")	14.0	45'11"	18 600	18 600	41 000
		15.0	49'3"	17 000	17 000	37 470
		16.0	52'6"	15 600	15 600	34 390
		18.0	59'1"	13 500	13 500	29 760
		20.0	65'7"	11 900	11 900	26 230
		22.0	72'2"	10 600	10 600	23 360
		24.0	78'9"	9 600	9 600	21 160
		25.9	85'0"	8 850	8 850	19 510
	28.0 (91'10")	15.5	50'10"	15 400	15 400	33 950
		16.0	52'6"	15 000	15 000	33 060
		18.0	59'1"	13 500	13 500	29 760
		20.0	65'7"	11 900	11 900	26 230
		22.0	72'2"	10 600	10 600	23 360
		24.0	78'9"	9 600	9 600	21 160
		26.0	85'4"	8 700	8 700	19 180
		28.0	91'10"	8 000	8 000	17 630
		28.6	93'10"	7 800	7 800	17 190

Tower length	Jib length	Working radius		Rated load		
				JIS rating	PCSA rating	
m (ft in)	m (ft in)	m	ft in	kg	kg	lb
37.0 (121'5")	22.0 (72'2")	13.0	42'8"	20 000	20 000	44 090
		14.0	45'11"	20 000	20 000	44 090
		15.0	49'3"	17 050	17 050	37 580
		16.0	52'6"	15 600	15 600	34 390
		18.0	59'1"	13 500	13 500	29 760
		20.0	65'7"	11 900	11 900	26 230
		22.0	72'2"	10 600	10 600	23 360
		23.2	76'1"	10 000	10 000	22 040
	25.0 (82'0")	14.0	45'11"	18 600	18 600	41 000
		15.0	49'3"	17 000	17 000	37 470
		16.0	52'6"	15 600	15 600	34 390
		18.0	59'1"	13 500	13 500	29 760
		20.0	65'7"	11 900	11 900	26 230
		22.0	72'2"	10 600	10 600	23 360
		24.0	78'9"	9 600	9 600	21 160
		25.9	85'0"	8 850	8 850	19 510
	28.0 (91'10")	15.5	50'10"	15 400	15 400	33 950
		16.0	52'6"	15 000	15 000	33 060
		18.0	59'1"	13 500	13 500	29 760
		20.0	65'7"	11 900	11 900	26 230
		22.0	72'2"	10 600	10 600	23 360
		24.0	78'9"	9 600	9 600	21 160
		26.0	85'4"	8 700	8 700	19 180
		28.0	91'10"	8 000	8 000	17 630
		28.6	93'10"	7 800	7 800	17 190
	31.0 (101'8")	16.8	55'1"	14 600	14 600	32 180
		18.0	59'1"	13 500	13 500	29 760
		20.0	65'7"	11 900	11 900	26 230
		22.0	72'2"	10 600	10 600	23 360
		24.0	78'9"	9 600	9 600	21 160
		26.0	85'4"	8 700	8 700	19 180
		28.0	91'10"	8 000	8 000	17 630
		30.0	98'5"	7 300	7 300	16 090
		31.3	102'8"	6 900	6 900	15 210

Tower length	Jib length	Working radius		Rated load		
				JIS rating	PCSA rating	
m (ft in)	m (ft in)	m	ft in	kg	kg	lb
40.0 (131'3")	22.0 (72'2")	13.0	42'8"	17 300	17 300	38 140
		14.0	45'11"	16 300	16 300	35 930
		15.0	49'3"	15 450	15 450	34 060
		16.0	52'6"	14 650	14 650	32 290
		18.0	59'1"	13 500	13 500	29 760
		20.0	65'7"	11 900	11 900	26 230
		22.0	72'2"	10 600	10 600	23 360
		23.2	76'1"	10 000	10 000	22 040
	25.0 (82'0")	14.0	45'11"	15 600	15 600	34 390
		15.0	49'3"	15 000	15 000	33 060
		16.0	52'6"	14 400	14 400	31 740
		18.0	59'1"	13 500	13 500	29 760
		20.0	65'7"	11 900	11 900	26 230
		22.0	72'2"	10 600	10 600	23 360
		24.0	78'9"	9 600	9 600	21 160
		25.9	85'0"	8 900	8 900	19 620
	28.0 (91'10")	15.5	50'10"	14 400	14 400	31 740
		16.0	52'6"	14 150	14 150	31 190
		18.0	59'1"	13 500	13 500	29 760
		20.0	65'7"	11 850	11 850	26 120
		22.0	72'2"	10 600	10 600	23 360
		24.0	78'9"	9 600	9 600	21 160
		26.0	85'4"	8 700	8 700	19 180
		28.0	91'10"	8 000	8 000	17 630
		28.6	93'10"	7 800	7 800	17 190
	31.0 (101'8")	16.8	55'1"	13 150	13 150	28 990
		18.0	59'1"	12 600	12 600	27 770
		20.0	65'7"	11 600	11 600	25 570
		22.0	72'2"	10 600	10 600	23 360
		24.0	78'9"	9 600	9 600	21 160
		26.0	85'4"	8 700	8 700	19 180
		28.0	91'10"	8 000	8 000	17 630
		30.0	98'5"	7 300	7 300	16 090
		31.3	102'8"	6 900	6 900	15 210
	34.0 (111'7")	18.0	59'1"	12 100	12 100	26 670
		20.0	65'7"	11 200	11 200	24 690
		22.0	72'2"	10 400	10 400	22 920
		24.0	78'9"	9 600	9 600	21 160
		26.0	85'4"	8 700	8 700	19 180
		28.0	91'10"	8 000	8 000	17 630
		30.0	98'5"	7 300	7 300	16 090
		32.0	105'0"	6 700	6 700	14 770
		34.0	111'7"	6 100	6 100	13 440
		34.1	111'11"	6 050	6 050	13 330

Tower length	Jib length	Working radius		Rated load		
				JIS rating	PCSA rating	
m (ft in)	m (ft in)	m	ft in	kg	kg	lb
43.0 (141'1")	22.0 (72'2")	13.0	42'8"	17 300	17 300	38 140
		14.0	45'11"	16 300	16 300	35 930
		15.0	49'3"	15 450	15 450	34 060
		16.0	52'6"	14 650	14 650	32 290
		18.0	59'1"	13 500	13 500	29 760
		20.0	65'7"	11 900	11 900	26 230
		22.0	72'2"	10 600	10 600	23 360
		23.2	76'1"	10 000	10 000	22 040
	25.0 (82'0")	14.0	45'11"	15 600	15 600	34 390
		15.0	49'3"	15 000	15 000	33 060
		16.0	52'6"	14 400	14 400	31 740
		18.0	59'1"	13 500	13 500	29 760
		20.0	65'7"	11 900	11 900	26 230
		22.0	72'2"	10 600	10 600	23 360
		24.0	78'9"	9 600	9 600	21 160
		25.9	85'0"	8 900	8 900	19 620
	28.0 (91'10")	15.5	50'10"	14 400	14 400	31 740
		16.0	52'6"	14 150	14 150	31 190
		18.0	59'1"	13 500	13 500	29 760
		20.0	65'7"	11 850	11 850	26 120
		22.0	72'2"	10 600	10 600	23 360
		24.0	78'9"	9 600	9 600	21 160
		26.0	85'4"	8 700	8 700	19 180
		28.0	91'10"	8 000	8 000	17 630
		28.6	93'10"	7 800	7 800	17 190
	31.0 (101'8")	16.8	55'1"	13 150	13 150	28 990
		18.0	59'1"	12 600	12 600	27 770
		20.0	65'7"	11 600	11 600	25 570
		22.0	72'2"	10 600	10 600	23 360
		24.0	78'9"	9 600	9 600	21 160
		26.0	85'4"	8 700	8 700	19 180
		28.0	91'10"	8 000	8 000	17 630
		30.0	98'5"	7 300	7 300	16 090
		31.3	102'8"	6 900	6 900	15 210
	34.0 (111'7")	18.0	59'1"	12 100	12 100	26 670
		20.0	65'7"	11 200	11 200	24 690
		22.0	72'2"	10 400	10 400	22 920
		24.0	78'9"	9 600	9 600	21 160
		26.0	85'4"	8 700	8 700	19 180
		28.0	91'10"	8 000	8 000	17 630
		30.0	98'5"	7 300	7 300	16 090
		32.0	105'0"	6 700	6 700	14 770
		34.0	111'7"	6 100	6 100	13 440
		34.1	111'11"	6 050	6 050	13 330
	37.0 (121'5")	19.5	64'0"	11 100	11 100	24 470
		20.0	65'7"	10 900	10 900	24 030
		22.0	72'2"	10 100	10 100	22 260
		24.0	78'9"	9 400	9 400	20 720
		26.0	85'4"	8 700	8 700	19 180
		28.0	91'10"	8 000	8 000	17 630
		30.0	98'5"	7 300	7 300	16 090
		32.0	105'0"	6 700	6 700	14 770
		34.0	111'7"	6 100	6 100	13 440
		36.0	118'1"	5 500	5 500	12 120
		36.8	120'9"	5 250	5 250	11 570

Tower length	Jib length	Working radius		Rated load		
				JIS rating	PCSA rating	
m (ft in)	m (ft in)	m	ft in	kg	kg	lb
46.0 (150'11")	22.0 (72'2")	13.0	42'8"	17 300	17 300	38 140
		14.0	45'11"	16 300	16 300	35 930
		15.0	49'3"	15 450	15 450	34 060
		16.0	52'6"	14 650	14 650	32 290
		18.0	59'1"	13 500	13 500	29 760
		20.0	65'7"	11 900	11 900	26 230
		22.0	72'2"	10 600	10 600	23 360
		23.2	76'1"	10 000	10 000	22 040
	25.0 (82'0")	14.0	45'11"	15 600	15 600	34 390
		15.0	49'3"	15 000	15 000	33 060
		16.0	52'6"	14 400	14 400	31 740
		18.0	59'1"	13 500	13 500	29 760
		20.0	65'7"	11 900	11 900	26 230
		22.0	72'2"	10 600	10 600	23 360
		24.0	78'9"	9 600	9 600	21 160
		25.9	85'0"	8 900	8 900	19 620
	28.0 (91'10")	15.5	50'10"	14 400	14 400	31 740
		16.0	52'6"	14 150	14 150	31 190
		18.0	59'1"	13 500	13 500	29 760
		20.0	65'7"	11 850	11 850	26 120
		22.0	72'2"	10 600	10 600	23 360
		24.0	78'9"	9 600	9 600	21 160
		26.0	85'4"	8 700	8 700	19 180
		28.0	91'10"	8 000	8 000	17 630
		28.6	93'10"	7 800	7 800	17 190
	31.0 (101'8")	16.8	55'1"	13 150	13 150	28 990
		18.0	59'1"	12 600	12 600	27 770
		20.0	65'7"	11 600	11 600	25 570
		22.0	72'2"	10 600	10 600	23 360
		24.0	78'9"	9 600	9 600	21 160
		26.0	85'4"	8 700	8 700	19 180
		28.0	91'10"	8 000	8 000	17 630
		30.0	98'5"	7 300	7 300	16 090
		31.3	102'8"	6 900	6 900	15 210
	34.0 (111'7")	18.0	59'1"	12 100	12 100	26 670
		20.0	65'7"	11 200	11 200	24 690
		22.0	72'2"	10 400	10 400	22 920
		24.0	78'9"	9 600	9 600	21 160
		26.0	85'4"	8 700	8 700	19 180
		28.0	91'10"	8 000	8 000	17 630
		30.0	98'5"	7 300	7 300	16 090
		32.0	105'0"	6 700	6 700	14 770
		34.0	111'7"	6 100	6 100	13 440
		34.1	111'11"	6 050	6 050	13 330
	37.0 (121'5")	19.5	64'0"	11 100	11 100	24 470
		20.0	65'7"	10 900	10 900	24 030
		22.0	72'2"	10 100	10 100	22 260
		24.0	78'9"	9 400	9 400	20 720
		26.0	85'4"	8 700	8 700	19 180
		28.0	91'10"	8 000	8 000	17 630
		30.0	98'5"	7 300	7 300	16 090
		32.0	105'0"	6 700	6 700	14 770
		34.0	111'7"	6 100	6 100	13 440
		36.0	118'1"	5 500	5 500	12 120
		36.8	120'9"	5 250	5 250	11 570

Tower length	Jib length	Working radius		Rated load		
				JIS rating	PCSA rating	
m (ft in)	m (ft in)	m	ft in	kg	kg	lb
46.0 (150'11")	40.0 (131'3")	21.0	68'11"	10 100	10 100	22 260
		22.0	72'2"	9 800	9 800	21 600
		24.0	78'9"	9 200	9 200	20 280
		26.0	85'4"	8 600	8 600	18 950
		28.0	91'10"	8 000	8 000	17 630
		30.0	98'5"	7 300	7 300	16 090
		32.0	105'0"	6 700	6 700	14 770
		34.0	111'7"	6 100	6 100	13 440
		36.0	118'1"	5 200	5 200	11 460
		38.0	124'8"	4 500	4 500	9 920
		39.5	129'7"	4 000	4 000	8 810
49.0 (160'9")	22.0 (72'2")	13.0	42'8"	15 000	15 000	33 060
		14.0	45'11"	14 250	14 250	31 410
		15.0	49'3"	13 450	13 450	29 660
		16.0	52'6"	12 800	12 800	28 210
		18.0	59'1"	11 600	11 600	25 570
		20.0	65'7"	10 550	10 550	23 250
		22.0	72'2"	9 500	9 500	20 940
		23.2	76'1"	8 850	8 850	19 510
	25.0 (82'0")	14.0	45'11"	13 800	13 800	30 420
		15.0	49'3"	13 100	13 100	28 880
		16.0	52'6"	12 500	12 500	27 550
		18.0	59'1"	11 400	11 400	25 130
		20.0	65'7"	10 400	10 400	22 920
		22.0	72'2"	9 500	9 500	20 940
		24.0	78'9"	8 550	8 550	18 840
		25.9	85'0"	7 750	7 750	17 080
	28.0 (91'10")	15.5	50'10"	12 400	12 400	27 330
		16.0	52'6"	12 100	12 100	26 670
		18.0	59'1"	11 100	11 100	24 470
		20.0	65'7"	10 200	10 200	22 480
		22.0	72'2"	9 400	9 400	20 720
		24.0	78'9"	8 500	8 500	18 730
		26.0	85'4"	7 900	7 900	17 410
		28.0	91'10"	7 200	7 200	15 870
		28.6	93'10"	7 000	7 000	15 430
	31.0 (101'8")	16.8	55'1"	11 400	11 400	25 130
		18.0	59'1"	10 900	10 900	24 030
		20.0	65'7"	10 000	10 000	22 040
		22.0	72'2"	9 300	9 300	20 500
		24.0	78'9"	8 500	8 500	18 730
		26.0	85'4"	7 900	7 900	17 410
		28.0	91'10"	7 200	7 200	15 870
		30.0	98'5"	6 600	6 600	14 550
		31.3	102'8"	6 200	6 200	13 660
	34.0 (111'7")	18.0	59'1"	10 400	10 400	22 920
		20.0	65'7"	9 600	9 600	21 160
		22.0	72'2"	8 900	8 900	19 620
		24.0	78'9"	8 200	8 200	18 070
		26.0	85'4"	7 600	7 600	16 750
		28.0	91'10"	7 000	7 000	15 430
		30.0	98'5"	6 400	6 400	14 100
		32.0	105'0"	5 800	5 800	12 780
		34.0	111'7"	5 200	5 200	11 460
		34.1	111'11"	5 150	5 150	11 350

Tower length	Jib length	Working radius		Rated load		
				JIS rating	PCSA rating	
m (ft in)	m (ft in)	m	ft in	kg	kg	lb
49.0 (160'9")	37.0 (121'5")	19.5	64'0"	9 450	9 450	20 830
		20.0	65'7"	9 300	9 300	20 500
		22.0	72'2"	8 600	8 600	18 950
		24.0	78'9"	8 000	8 000	17 630
		26.0	85'4"	7 400	7 400	16 310
		28.0	91'10"	6 800	6 800	14 990
		30.0	98'5"	6 100	6 100	13 440
		32.0	105'0"	5 500	5 500	12 120
		34.0	111'7"	5 000	5 000	11 020
		36.8	120'9"	4 300	4 300	9 540
	40.0 (131'3")	21.0	68'11"	8 800	8 800	19 400
		22.0	72'2"	8 500	8 500	18 730
		24.0	78'9"	7 800	7 800	17 190
		26.0	85'4"	7 100	7 100	15 650
		28.0	91'10"	6 500	6 500	14 330
		30.0	98'5"	5 900	5 900	13 000
		32.0	105'0"	5 300	5 300	11 680
		34.0	111'7"	4 800	4 800	10 580
		36.0	118'1"	4 200	4 200	9 250
		38.0	124'8"	3 800	3 800	8 370
		39.5	129'7"	3 400	3 400	7 490
	43.0 (141'1")	22.5	73'10"	8 000	8 000	17 630
		24.0	78'9"	7 600	7 600	16 750
		26.0	85'4"	7 100	7 100	15 650
		28.0	91'10"	6 500	6 500	14 330
		30.0	98'5"	5 900	5 900	13 000
		32.0	105'0"	5 300	5 300	11 680
		34.0	111'7"	4 700	4 700	10 360
		36.0	118'1"	4 200	4 200	9 250
		38.0	124'8"	3 700	3 700	8 150
		40.0	131'3"	3 300	3 300	7 270
		42.0	137'10"	3 000	3 000	6 610

Notes:

1. The rated loads shown are based on the machine on firm, level ground.
2. The rated loads shown include the weights of all lifting attachments such as hook. The load to be actually lifted is the rated load minus the weight of all lifting attachments.
3. The rated loads shown are limited by structural strength of the machine.
4. Counterweight is 33 400 kg (73 600 lb).
5. In operation, crawlers must be extended.

SALE & RENTAL

Working Ranges (80° Tower Angle)

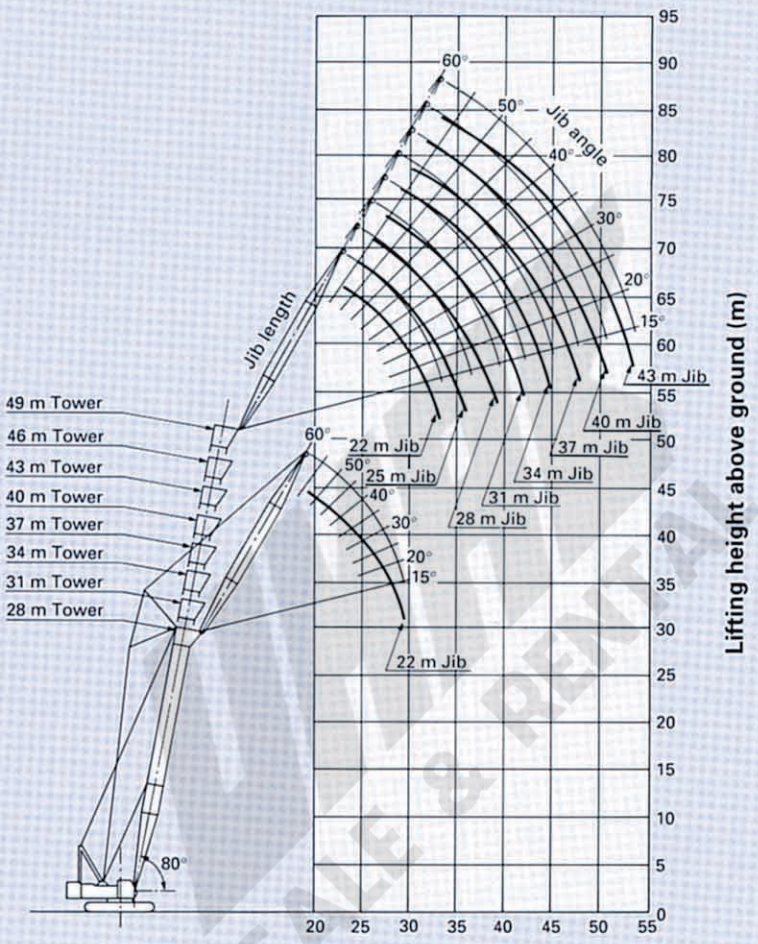

Working ranges are under no-load conditions.

SALE & RENTAL

Rated Load (80° Tower Angle)

Tower length	Jib length	Working radius		Rated load		
				JIS rating	PCSA rating	
m (ft in)	m (ft in)	m	ft in	kg	kg	lb
28.0 (91'10")	22.0 (72'2")	20.7	67'11"	11 400	11 400	25 130
		22.0	72'2"	10 600	10 600	23 360
		24.0	78'9"	9 600	9 600	21 160
		26.0	85'4"	8 700	8 700	19 180
		28.0	91'10"	8 000	8 000	17 630
		29.3	96'2"	7 550	7 550	16 640
31.0 (101'8")	22.0 (72'2")	21.2	69'7"	11 100	11 100	24 470
		22.0	72'2"	10 600	10 600	23 360
		24.0	78'9"	9 600	9 600	21 160
		26.0	85'4"	8 700	8 700	19 180
		28.0	91'10"	8 000	8 000	17 630
		29.8	97'9"	7 350	7 350	16 200
	25.0 (82'0")	22.7	74'6"	10 250	10 250	22 590
		24.0	78'9"	9 600	9 600	21 160
		26.0	85'4"	8 700	8 700	19 180
		28.0	91'10"	8 000	8 000	17 630
		30.0	98'5"	7 300	7 300	16 090
		32.0	105'0"	6 700	6 700	14 770
		32.7	107'3"	6 450	6 450	14 210
34.0 (111'7")	22.0 (72'2")	21.8	71'6"	10 700	10 700	23 580
		22.0	72'2"	10 600	10 600	23 360
		24.0	78'9"	9 600	9 600	21 160
		26.0	85'4"	8 700	8 700	19 180
		28.0	91'10"	8 000	8 000	18 950
		30.0	98'5"	7 300	7 300	16 090
		30.3	99'5"	7 200	7 200	15 870
	25.0 (82'0")	23.3	76'5"	9 950	9 950	21 930
		24.0	78'9"	9 600	9 600	21 160
		26.0	85'4"	8 700	8 700	19 180
		28.0	91'10"	8 000	8 000	17 630
		30.0	98'5"	7 300	7 300	16 090
		32.0	105'0"	6 700	6 700	14 770
		33.2	108'11"	6 300	6 300	13 880
	28.0 (91'10")	24.8	81'4"	9 200	9 200	20 280
		26.0	85'4"	8 700	8 700	19 180
		28.0	91'10"	8 000	8 000	17 630
		30.0	98'5"	7 300	7 300	16 090
		32.0	105'0"	6 700	6 700	14 770
		34.0	111'7"	6 100	6 100	13 440
		36.0	118'1"	5 500	5 500	12 120
		36.1	118'5"	5 450	5 450	12 010
37.0 (121'5")	22.0 (72'2")	22.3	73'2"	10 450	10 450	23 030
		24.0	78'9"	9 600	9 600	21 160
		26.0	85'4"	8 700	8 700	19 180
		28.0	91'10"	8 000	8 000	17 630
		30.0	98'5"	7 300	7 300	16 090
		30.8	101'1"	7 050	7 050	15 540
	25.0 (82'0")	23.8	78'1"	9 700	9 700	21 380
		24.0	78'9"	9 600	9 600	21 160
		26.0	85'4"	8 700	8 700	19 180
		28.0	91'10"	8 000	8 000	17 630
		30.0	98'5"	7 300	7 300	16 090
		32.0	105'0"	6 700	6 700	14 770
		33.7	110'7"	6 150	6 150	13 550

Tower length	Jib length	Working radius		Rated load		
				JIS rating	PCSA rating	
m (ft in)	m (ft in)	m	ft in	kg	kg	lb
37.0 (121'5")	28.0 (91'10")	25.3	83'0"	9 000	9 000	19 840
		26.0	85'4"	8 700	8 700	19 180
		28.0	91'10"	8 000	8 000	17 630
		30.0	98'5"	7 300	7 300	16 090
		32.0	105'0"	6 700	6 700	14 770
		34.0	111'7"	6 100	6 100	13 440
		36.0	118'1"	5 500	5 500	12 120
		36.6	120'1"	5 350	5 350	11 790
	31.0 (101'8")	26.8	87'11"	8 400	8 400	18 510
		28.0	91'10"	8 000	8 000	17 630
		30.0	98'5"	7 300	7 300	16 090
		32.0	105'0"	6 700	6 700	14 770
		34.0	111'7"	6 100	6 100	13 440
		36.0	118'1"	5 500	5 500	12 120
		38.0	124'8"	5 000	5 000	11 020
		39.5	129'7"	4 850	4 850	10 690
40.0 (131'3")	22.0 (72'2")	22.8	74'10"	10 200	10 200	22 480
		24.0	78'9"	9 600	9 600	21 160
		26.0	85'4"	8 700	8 700	19 180
		28.0	91'10"	8 000	8 000	17 630
		30.0	98'5"	7 300	7 300	16 090
		31.3	102'8"	6 900	6 900	15 210
	25.0 (82'0")	24.3	79'9"	9 450	9 450	20 830
		26.0	85'4"	8 700	8 700	19 180
		28.0	91'10"	8 000	8 000	17 630
		30.0	98'5"	7 300	7 300	16 090
		32.0	105'0"	6 700	6 700	14 770
		34.0	111'7"	6 100	6 100	13 440
		34.2	112'2"	6 000	6 000	13 220
	28.0 (91'10")	25.8	84'8"	8 750	8 750	19 290
		26.0	85'4"	8 700	8 700	19 180
		28.0	91'10"	8 000	8 000	17 630
		30.0	98'5"	7 300	7 300	16 090
		32.0	105'0"	6 700	6 700	14 770
		34.0	111'7"	6 100	6 100	13 440
		36.0	118'1"	5 500	5 500	12 120
		37.1	121'9"	5 200	5 200	11 460
	31.0 (101'8")	27.3	89'7"	8 200	8 200	18 070
		28.0	91'10"	8 000	8 000	17 630
		30.0	98'5"	7 300	7 300	16 090
		32.0	105'0"	6 700	6 700	14 770
		34.0	111'7"	6 100	6 100	13 440
		36.0	118'1"	5 500	5 500	12 120
		38.0	124'8"	5 000	5 000	11 020
		40.0	131'3"	4 500	4 500	9 920
	34.0 (111'7")	28.3	92'10"	7 700	7 700	16 970
		30.0	98'5"	7 300	7 300	16 090
		32.0	105'0"	6 700	6 700	14 770
		34.0	111'7"	6 100	6 100	13 440
		36.0	118'1"	5 500	5 500	12 120
		38.0	124'8"	5 000	5 000	11 020
		40.0	131'3"	4 500	4 500	9 920
		42.0	137'10"	4 000	4 000	8 810
		43.0	141'10"	3 800	3 800	8 370

Tower length	Jib length	Working radius		Rated load		
				JIS rating	PCSA rating	
m (ft in)	m (ft in)	m	ft in	kg	kg	lb
43.0 (141'1")	22.0 (72'2")	23.3	76'5"	9 950	9 950	21 930
		24.0	78'9"	9 600	9 600	21 160
		26.0	85'4"	8 700	8 700	19 180
		28.0	91'10"	8 000	8 000	17 630
		30.0	98'5"	7 300	7 300	16 090
		31.9	104'8"	6 700	6 700	14 770
	25.0 (82'0")	24.8	81'4"	9 200	9 200	20 280
		26.0	85'4"	8 700	8 700	19 180
		28.0	91'10"	8 000	8 000	17 630
		30.0	98'5"	7 300	7 300	16 090
		32.0	105'0"	6 700	6 700	14 770
		34.0	111'7"	6 100	6 100	13 440
		34.8	114'2"	5 850	5 850	12 890
	28.0 (91'10")	26.3	86'3"	8 550	8 550	18 840
		28.0	91'10"	8 000	8 000	17 630
		30.0	98'5"	7 300	7 300	16 090
		32.0	105'0"	6 700	6 700	14 770
		34.0	111'7"	6 100	6 100	13 440
		36.0	118'1"	5 500	5 500	12 120
		37.7	123'8"	5 050	5 050	11 130
	31.0 (101'8")	27.8	91'2"	8 050	8 050	17 740
		28.0	91'10"	8 000	8 000	17 630
		30.0	98'5"	7 300	7 300	16 090
		32.0	105'0"	6 700	6 700	14 770
		34.0	111'7"	6 100	6 100	13 440
		36.0	118'1"	5 500	5 500	12 120
		38.0	124'8"	5 000	5 000	11 020
		40.0	131'3"	4 500	4 500	9 920
		40.6	133'2"	4 350	4 350	9 590
	34.0 (111'7")	29.3	96'2"	7 500	7 500	16 530
		30.0	98'5"	7 300	7 300	16 090
		32.0	105'0"	6 700	6 700	14 770
		34.0	111'7"	6 100	6 100	13 440
		36.0	118'1"	5 500	5 500	12 120
		38.0	124'8"	5 000	5 000	11 020
		40.0	131'3"	4 500	4 500	9 920
		42.0	137'10"	4 000	4 000	8 810
		43.5	142'9"	3 700	3 700	8 150
	37.0 (121'5")	30.8	101'1"	7 050	7 050	15 540
		32.0	105'0"	6 700	6 700	14 770
		34.0	111'7"	6 100	6 100	13 440
		36.0	118'1"	5 500	5 500	12 120
		38.0	124'8"	5 000	5 000	11 020
		40.0	131'3"	4 500	4 500	9 920
		42.0	137'10"	4 000	4 000	8 810
		44.0	144'4"	3 600	3 600	7 930
		46.0	150'11"	3 400	3 400	7 490
		46.4	152'3"	3 350	3 350	7 380

Tower length	Jib length	Working radius		Rated load		
				JIS rating	PCSA rating	
m (ft in)	m (ft in)	m	ft in	kg	kg	lb
46.0 (150'11")	22.0 (72'2")	23.8	78'1"	9 700	9 700	21 380
		24.0	78'9"	9 600	9 600	21 160
		26.0	85'4"	8 700	8 700	19 180
		28.0	91'10"	8 000	8 000	17 630
		30.0	98'5"	7 300	7 300	16 090
		32.0	105'0"	6 700	6 700	14 770
		32.4	106'4"	6 550	6 550	14 440
	25.0 (82'0")	25.3	83'0"	9 000	9 000	19 840
		26.0	85'4"	8 700	8 700	19 180
		28.0	91'10"	8 000	8 000	17 630
		30.0	98'5"	7 300	7 300	16 090
		32.0	105'0"	6 700	6 700	14 770
		34.0	111'7"	6 100	6 100	13 440
		35.3	115'10"	5 700	5 700	12 560
	28.0 (91'10")	26.8	87'11"	8 400	8 400	18 510
		28.0	91'10"	8 000	8 000	17 630
		30.0	98'5"	7 300	7 300	16 090
		32.0	105'0"	6 700	6 700	14 770
		34.0	111'7"	6 100	6 100	13 440
		36.0	118'1"	5 500	5 500	12 120
		38.0	124'8"	5 000	5 000	11 020
		38.2	125'4"	4 950	4 950	10 910
	31.0 (101'8")	28.3	92'10"	7 850	7 850	17 300
		30.0	98'5"	7 300	7 300	16 090
		32.0	105'0"	6 700	6 700	14 770
		34.0	111'7"	6 100	6 100	13 440
		36.0	118'1"	5 500	5 500	12 120
		38.0	124'8"	5 000	5 000	11 020
		40.0	131'3"	4 500	4 500	9 920
		41.1	134'10"	4 200	4 200	9 250
	34.0 (111'7")	29.8	97'9"	7 350	7 350	16 200
		30.0	98'5"	7 300	7 300	16 090
		32.0	105'0"	6 700	6 700	14 770
		34.0	111'7"	6 100	6 100	13 440
		36.0	118'1"	5 500	5 500	12 120
		38.0	124'8"	5 000	5 000	11 020
		40.0	131'3"	4 500	4 500	9 920
		42.0	137'10"	4 000	4 000	8 810
		44.0	144'4"	3 600	3 600	7 930
	37.0 (121'5")	31.3	102'8"	6 900	6 900	15 210
		32.0	105'0"	6 700	6 700	14 770
		34.0	111'7"	6 100	6 100	13 440
		36.0	118'1"	5 500	5 500	12 120
		38.0	124'8"	5 000	5 000	11 020
		40.0	131'3"	4 500	4 500	9 920
		42.0	137'10"	4 000	4 000	8 810
		44.0	144'4"	3 600	3 600	7 930
		46.0	150'11"	3 400	3 400	7 490
		46.9	153'10"	3 300	3 300	7 270
	40.0 (131'3")	32.8	107'7"	6 450	6 450	14 210
		34.0	111'7"	6 100	6 100	13 440
		36.0	118'1"	5 500	5 500	12 120
		38.0	124'8"	5 000	5 000	11 020
		40.0	131'3"	4 500	4 500	9 920
		42.0	137'10"	4 000	4 000	8 810
		44.0	144'4"	3 600	3 600	7 930
		46.0	150'11"	3 400	3 400	7 490
		48.0	157'6"	3 200	3 200	7 270
		49.8	163'5"	3 000	3 000	6 610

Tower length	Jib length	Working radius		Rated load		
				JIS rating	PCSA rating	
m (ft in)	m (ft in)	m	ft in	kg	kg	lb
49.0 (160'9")	22.0 (72'2")	24.4	80'1"	8 450	8 450	18 620
		26.0	85'4"	7 900	7 900	17 410
		28.0	91'10"	7 200	7 200	15 870
		30.0	98'5"	6 600	6 600	14 550
		32.0	105'0"	5 800	5 800	12 780
		33.0	108'3"	5 600	5 600	12 340
	25.0 (82'0")	25.9	84'12"	7 900	7 900	17 410
		26.0	85'4"	7 900	7 900	17 410
		28.0	91'10"	7 200	7 200	15 870
		30.0	98'5"	6 600	6 600	14 550
		32.0	105'0"	5 800	5 800	12 780
		34.0	111'7"	5 200	5 200	11 460
		35.9	117'9"	4 500	4 500	9 920
	28.0 (91'10")	27.4	89'11"	7 400	7 400	16 310
		28.0	91'10"	7 200	7 200	15 870
		30.0	98'5"	6 600	6 600	14 550
		32.0	105'0"	5 800	5 800	12 780
		34.0	111'7"	5 200	5 200	11 460
		36.0	118'1"	4 500	4 500	9 920
		38.0	124'8"	3 800	3 800	8 370
		38.7	131'8"	3 600	3 600	7 930
	31.0 (101'8")	28.9	94'10"	6 900	6 900	15 210
		30.0	98'5"	6 600	6 600	14 550
		32.0	105'0"	5 800	5 800	12 780
		34.0	111'7"	5 200	5 200	11 460
		36.0	118'1"	4 500	4 500	9 920
		38.0	124'8"	3 800	3 800	8 370
		40.0	131'3"	3 300	3 300	7 270
		41.6	136'6"	3 500	3 500	7 710
	34.0 (111'7")	30.4	99'9"	6 450	6 450	14 210
		32.0	105'0"	5 800	5 800	12 780
		34.0	111'7"	5 200	5 200	11 460
		36.0	118'1"	4 500	4 500	9 920
		38.0	124'8"	3 800	3 800	8 370
		40.0	131'3"	3 300	3 300	7 270
		42.0	137'10"	3 000	3 000	6 610
		44.0	144'4"	2 800	2 800	6 170
		44.5	146'0"	2 750	2 750	6 060
	37.0 (121'5")	31.9	104'8"	5 800	5 800	12 780
		32.0	105'0"	5 800	5 800	12 780
		34.0	111'7"	5 200	5 200	11 460
		36.0	118'1"	4 500	4 500	9 920
		38.0	124'8"	3 800	3 800	8 370
		40.0	131'3"	3 300	3 300	7 270
		42.0	137'10"	3 000	3 000	6 610
		44.0	144'4"	2 800	2 800	6 170
		46.0	150'11"	2 600	2 600	5 730
		47.4	155'6"	2 500	2 500	5 510
	40.0 (131'3")	33.4	109'7"	5 350	5 350	11 790
		34.0	111'7"	5 200	5 200	11 460
		36.0	118'1"	4 500	4 500	9 920
		38.0	124'8"	3 800	3 800	8 370
		40.0	131'3"	3 300	3 300	7 270
		42.0	137'10"	3 000	3 000	6 610
		44.0	144'4"	2 800	2 800	6 170
		46.0	150'11"	2 600	2 600	5 730
		48.0	157'6"	2 500	2 500	5 510
		50.0	164'1"	2 400	2 400	5 290
		50.3	165'0"	2 350	2 350	5 180

Tower length	Jib length	Working radius		Rated load		
				JIS rating	PCSA rating	
m (ft in)	m (ft in)	m	ft in	kg	kg	lb
49.0 (160'9")	43.0 (141'1")	34.9	114'6"	4 850	4 850	10 690
		36.0	118'1"	4 500	4 500	9 920
		38.0	124'8"	3 800	3 800	8 370
		40.0	131'3"	3 300	3 300	7 270
		42.0	137'10"	3 000	3 000	6 610
		44.0	144'4"	2 800	2 800	6 170
		46.0	150'11"	2 600	2 600	5 730
		48.0	157'6"	2 500	2 500	5 510
		50.0	164'1"	2 400	2 400	5 290
		52.0	170'7"	2 300	2 300	5 070
		53.2	174'6"	2 200	2 200	4 850

Notes:

1. The rated loads shown are based on the machine on firm, level ground.
2. The rated loads shown include the weights of all lifting attachments such as hook. The load to be actually lifted is the rated load minus the weight of all lifting attachments.
3. The rated loads shown are limited by structural strength of the machine.
4. Counterweight is 33 400 kg (73 600 lb).
5. In operation, crawlers must be extended.

Working Ranges (70° Tower Angle)

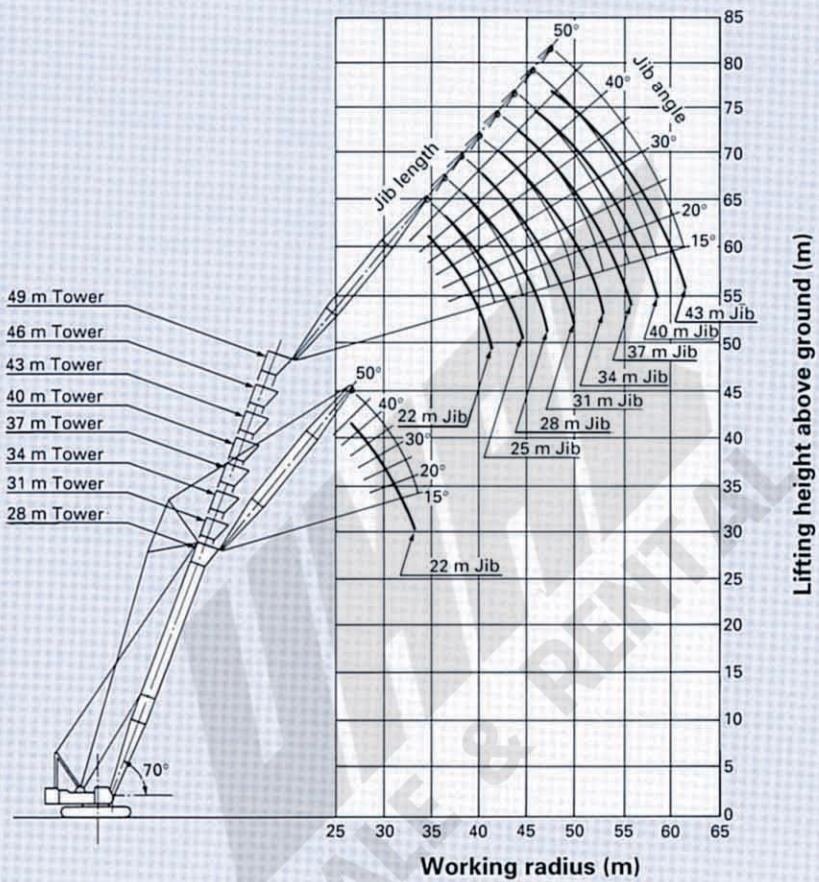

Working ranges are under no-load conditions.

SAFE & PENTA

Rated Load (70° Tower Angle)

Tower length	Jib length	Working radius		Rated load		
				JIS rating	PCSA rating	
m (ft in)	m (ft in)	m	ft in	kg	kg	lb
28.0 (91'10")	22.0 (72'2")	28.5	93'6"	7 800	7 800	17 190
		30.0	98'5"	7 300	7 300	16 090
		32.0	105'0"	6 700	6 700	14 770
		33.9	111'3"	6 100	6 100	13 440
31.0 (101'8")	22.0 (72'2")	29.5	96'9"	7 450	7 450	16 420
		30.0	98'5"	7 300	7 300	16 090
		32.0	105'0"	6 700	6 700	14 770
		34.0	111'7"	6 100	6 100	13 440
		34.9	114'6"	5 800	5 800	12 780
	25.0 (82'0")	31.4	103'0"	6 850	6 850	15 100
		32.0	105'0"	6 700	6 700	14 770
		34.0	111'7"	6 100	6 100	13 440
		36.0	118'1"	5 500	5 500	12 120
		37.8	124'1"	5 050	5 050	11 130
34.0 (111'7")	22.0 (72'2")	30.5	100'1"	7 150	7 150	15 760
		32.0	105'0"	6 700	6 700	14 770
		34.0	111'7"	6 100	6 100	13 440
		35.9	117'9"	5 500	5 500	12 120
	25.0 (82'0")	32.4	106'4"	6 550	6 550	14 440
		34.0	111'7"	6 100	6 100	13 440
		36.0	118'1"	5 500	5 500	12 120
		38.0	124'8"	5 000	5 000	11 020
		38.9	127'7"	4 750	4 750	10 470
	28.0 (91'10")	34.4	112'10"	5 950	5 950	13 110
		36.0	118'1"	5 500	5 500	12 120
		38.0	124'8"	5 000	5 000	11 020
		40.0	131'3"	4 500	4 500	9 920
		41.7	136'8"	4 050	4 050	8 920
37.0 (121'5")	22.0 (72'2")	31.5	103'4"	6 850	6 850	15 100
		32.0	105'0"	6 700	6 700	14 770
		34.0	111'7"	6 100	6 100	13 440
		36.0	118'1"	5 500	5 500	12 120
		37.0	121'5"	5 250	5 250	11 570
	25.0 (82'0")	33.5	109'11"	6 250	6 250	13 770
		34.0	111'7"	6 100	6 100	13 440
		36.0	118'1"	5 500	5 500	12 120
		38.0	124'8"	5 000	5 000	11 020
		39.9	130'11"	4 500	4 500	9 920
	28.0 (91'10")	35.4	116'2"	5 650	5 650	12 450
		36.0	118'1"	5 500	5 500	12 120
		38.0	124'8"	5 000	5 000	11 020
		40.0	131'3"	4 500	4 500	9 920
		42.0	137'10"	4 000	4 000	8 810
		42.8	140'5"	3 800	3 800	8 370
	31.0 (101'8")	35.4	116'2"	5 650	5 650	12 450
		38.0	124'8"	5 000	5 000	11 020
		40.0	131'3"	4 500	4 500	9 920
		42.0	137'10"	4 000	4 000	8 810
		44.0	144'4"	3 600	3 600	7 930
		45.7	149'11"	3 400	3 400	7 490

Tower length	Jib length	Working radius		Rated load		
				JIS rating	PCSA rating	
m (ft in)	m (ft in)	m	ft in	kg	kg	lb
40.0 (131'3")	22.0 (72'2")	32.5	106'8"	6 550	6 550	14 440
		34.0	111'7"	6 100	6 100	13 440
		36.0	118'1"	5 500	5 500	12 120
		38.0	124'8"	5 000	5 000	11 020
	25.0 (82'0")	34.5	113'2"	5 950	5 950	13 110
		36.0	118'1"	5 500	5 500	12 120
		38.0	124'8"	5 000	5 000	11 020
		40.0	131'3"	4 500	4 500	9 920
		40.9	134'2"	4 250	4 250	9 360
	28.0 (91'10")	36.4	119'5"	5 400	5 400	11 900
		38.0	124'8"	5 000	5 000	11 020
		40.0	131'3"	4 500	4 500	9 920
		42.0	137'10"	4 000	4 000	8 810
		43.8	143'8"	3 600	3 600	7 930
	31.0 (101'8")	38.4	126'0"	4 900	4 900	10 800
		40.0	131'3"	4 500	4 500	9 920
		42.0	137'10"	4 000	4 000	8 810
		44.0	144'4"	3 600	3 600	7 930
		46.0	150'11"	3 400	3 400	7 490
	34.0 (111'7")	40.3	132'3"	4 400	4 400	9 700
		42.0	137'10"	4 000	4 000	8 810
		44.0	144'4"	3 600	3 600	7 930
		46.0	150'11"	3 400	3 400	7 490
		48.0	157'6"	3 200	3 200	7 050
		49.6	162'9"	3 100	3 100	6 830
43.0 (141'1")	22.0 (72'2")	33.6	110'3"	6 200	6 200	13 660
		34.0	111'7"	6 100	6 100	13 440
		36.0	118'1"	5 500	5 500	12 120
		38.0	124'8"	5 000	5 000	11 020
		39.0	127'11"	4 750	4 750	10 470
	25.0 (82'0")	35.5	116'6"	5 650	5 650	12 450
		36.0	118'1"	5 500	5 500	12 120
		38.0	124'8"	5 000	5 000	11 020
		40.0	131'3"	4 500	4 500	9 920
		41.9	137'6"	4 000	4 000	8 810
	28.0 (91'10")	37.5	123'0"	5 100	5 100	11 240
		38.0	124'8"	5 000	5 000	11 020
		40.0	131'3"	4 500	4 500	9 920
		42.0	137'10"	4 000	4 000	8 810
		44.0	144'4"	3 600	3 600	7 930
		44.8	147'0"	3 500	3 500	7 710
	31.0 (101'8")	39.4	129'3"	4 650	4 650	10 250
		40.0	131'3"	4 500	4 500	9 920
		42.0	137'10"	4 000	4 000	8 810
		44.0	144'4"	3 600	3 600	7 930
		46.0	150'11"	3 400	3 400	7 490
		47.7	156'6"	3 200	3 200	7 050
	34.0 (111'7")	41.3	135'6"	4 150	4 150	9 140
		42.0	137'10"	4 000	4 000	8 810
		44.0	144'4"	3 600	3 600	7 930
		46.0	150'11"	3 400	3 400	7 490
		48.0	157'6"	3 200	3 200	7 050
		50.0	164'1"	3 100	3 100	6 830
		50.6	166'0"	3 000	3 000	6 610

Tower length	Jib length	Working radius		Rated load		
				JIS rating	PCSA rating	
m (ft in)	m (ft in)	m	ft in	kg	kg	lb
43.0 (141'1")	37.0 (121'5")	43.2	141'9"	3 750	3 750	8 260
		44.0	144'4"	3 600	3 600	7 930
		46.0	150'11"	3 400	3 400	7 490
		48.0	157'6"	3 200	3 200	7 050
		50.0	164'1"	3 100	3 100	6 830
		52.0	170'7"	2 900	2 900	6 390
		53.5	175'6"	2 800	2 800	6 170
46.0 (150'11")	22.0 (72'2")	34.6	113'6"	5 900	5 900	13 000
		36.0	118'1"	5 500	5 500	12 120
		38.0	124'8"	5 000	5 000	11 020
		40.0	131'3"	4 500	4 500	9 920
	25.0 (82'0")	36.6	120'1"	5 350	5 350	11 790
		38.0	124'8"	5 000	5 000	11 020
		40.0	131'3"	4 500	4 500	9 920
		42.0	137'10"	4 000	4 000	8 810
		43.0	141'1"	3 800	3 800	8 370
	28.0 (91'10")	38.5	126'4"	4 850	4 850	10 690
		40.0	131'3"	4 500	4 500	9 920
		42.0	137'10"	4 000	4 000	8 810
		44.0	144'4"	3 600	3 600	7 930
		45.9	150'7"	3 400	3 400	7 490
	31.0 (101'8")	40.4	132'7"	4 400	4 400	9 700
		42.0	137'10"	4 000	4 000	8 810
		44.0	144'4"	3 600	3 600	7 930
		46.0	150'11"	3 400	3 400	7 490
		48.0	157'6"	3 200	3 200	7 050
		48.8	160'1"	3 150	3 150	6 940
	34.0 (111'7")	42.3	138'9"	3 900	3 900	8 590
		44.0	144'4"	3 600	3 600	7 930
		46.0	150'11"	3 400	3 400	7 490
		48.0	157'6"	3 200	3 200	7 050
		50.0	164'1"	3 100	3 100	6 830
		51.7	169'7"	2 900	2 900	6 390
	37.0 (121'5")	44.3	145'4"	3 550	3 550	7 820
		46.0	150'11"	3 400	3 400	7 490
		48.0	157'6"	3 200	3 200	7 050
		50.0	164'1"	3 100	3 100	6 830
		52.0	170'7"	2 900	2 900	6 390
		54.0	177'2"	2 700	2 700	5 950
		54.6	179'2"	2 600	2 600	5 730
	40.0 (131'3")	46.2	151'7"	3 350	3 350	7 380
		48.0	157'6"	3 200	3 200	7 050
		50.0	164'1"	3 100	3 100	6 830
		52.0	170'7"	2 900	2 900	6 390
		54.0	177'2"	2 700	2 700	5 950
		56.0	183'9"	2 500	2 500	5 510
		57.5	188'8"	2 300	2 300	5 070
49.0 (160'9")	22.0 (72'2")	35.7	117'2"	4 600	4 600	10 140
		36.0	118'1"	4 500	4 500	9 920
		38.0	124'8"	3 800	3 800	8 370
		40.0	131'3"	3 300	3 300	7 270
		41.1	134'10"	3 100	3 100	6 830
	25.0 (82'0")	37.6	123'4"	3 900	3 900	8 590
		38.0	124'8"	3 800	3 800	8 370
		40.0	131'3"	3 300	3 300	7 270
		42.0	137'10"	3 000	3 000	6 610
		44.0	144'4"	2 800	2 800	6 170

Tower length	Jib length	Working radius		Rated load		
				JIS rating	PCSA rating	
m (ft in)	m (ft in)	m	ft in	kg	kg	lb
49.0 (160'9")	28.0 (91'10")	39.5	129'7"	3 400	3 400	7 490
		40.0	131'3"	3 300	3 300	7 270
		42.0	137'10"	3 000	3 000	6 610
		44.0	144'4"	2 800	2 800	6 170
		46.0	150'11"	2 600	2 600	5 730
		46.9	153'10"	2 550	2 550	5 620
	31.0 (101'8")	41.4	135'10"	3 400	3 400	7 490
		42.0	137'10"	3 000	3 000	6 610
		44.0	144'4"	2 800	2 800	6 170
		46.0	150'11"	2 600	2 600	5 730
		48.0	157'6"	2 500	2 500	5 510
		49.8	163'5"	2 400	2 400	5 290
	34.0 (111'7")	43.4	142'5"	2 850	2 850	6 280
		44.0	144'4"	2 800	2 800	6 170
		46.0	150'11"	2 600	2 600	5 730
		48.0	157'6"	2 500	2 500	5 510
		50.0	164'1"	2 400	2 400	5 290
		52.0	170'7"	2 300	2 300	5 070
		52.7	172'11"	2 250	2 250	4 960
	37.0 (121'5")	45.3	148'7"	2 650	2 650	5 840
		46.0	150'11"	2 600	2 600	5 730
		48.0	157'6"	2 500	2 500	5 510
		50.0	164'1"	2 400	2 400	5 290
		52.0	170'7"	2 300	2 300	5 070
		54.0	177'2"	2 200	2 200	4 850
		55.6	182'5"	2 100	2 100	4 620
	40.0 (131'3")	47.2	154'10"	2 500	2 500	5 510
		48.0	157'6"	2 500	2 500	5 510
		50.0	164'1"	2 400	2 400	5 290
		52.0	170'7"	2 300	2 300	5 070
		54.0	177'2"	2 200	2 200	4 850
		56.0	183'9"	2 100	2 100	4 620
		58.0	190'3"	2 000	2 000	4 400
		58.5	191'11"	1 950	1 950	4 290
	43.0 (141'1")	49.2	161'5"	2 400	2 400	5 290
		50.0	164'1"	2 400	2 400	5 290
		52.0	170'7"	2 300	2 300	5 070
		54.0	177'2"	2 200	2 200	4 850
		56.0	183'9"	2 100	2 100	4 620
		58.0	190'3"	2 000	2 000	4 400
		60.0	196'10"	1 900	1 900	4 180
		61.4	201'5"	1 800	1 800	3 960

Notes:

1. The rated loads shown are based on the machine on firm, level ground.
2. The rated loads shown include the weights of all lifting attachments such as hook. The load to be actually lifted is the rated load minus the weight of all lifting attachments.
3. The rated loads shown are limited by structural strength of the machine.
4. Counterweight is 33 400 kg (73 600 lb).
5. In operation, crawlers must be extended.

Tower & Jib Construction

Tower Construction

Element \ Tower length	28 m (91'10")	31 m (101'8")	34 m (111'7")	37 m (121'5")	40 m (131'3")	43 m (141'1")	46 m (150'11")	49 m (160'9")
Lower tower 8 m (26'3")	1	1	1	1	1	1	1	1
Upper tower 2 m (6'7")	1	1	1	1	1	1	1	1
Insert 3 m (9'10") (A)	—	1	2	1	1	2	1	1
Insert 3 m (9'10") (B)	1	1	1	1	1	1	1	1
Insert 6 m (19'8")	1	1	1	2	1	1	2	1
Insert 9 m (29'6") (A)	1	1	1	1	2	2	2	3
Available jib	Jib length 22 m (72'2")							
		Jib length 25 m (82'0")						
			Jib length 28 m (91'10")					
				Jib length 31 m (101'8")				
					Jib length 34 m (111'7")			
						Jib length 37 m (121'5")		
							Jib length 46 m (131'3")	
								Jib length 43 m (141'1")

Jib Construction

Element \ Jib length	22 m (72'2")	25 m (82'0")	28 m (91'10")	31 m (101'8")	34 m (111'7")	37 m (121'5")	40 m (131'3")	43 m (141'1")
Lower 6.5 m (21'4")	1	1	1	1	1	1	1	1
Upper 6.5 m (21'4")	1	1	1	1	1	1	1	1
Insert 3 m (9'10")	—	1	2	1	2	2	1	2
Insert 6 m (19'8")	—	—	—	1	1	—	1	1
Insert 9 m (29'6")	1	1	1	1	1	2	2	2

Specifications

SUPERSTRUCTURE

Engine

Model	ISUZU 6RB1T
Type	Water-cooled, 4-cycle, 6-cylinder, direct fuel injection type diesel engine. 183 g/PS·hr
Rated horsepower (DIN 6 270, Net)	206 kW (280 PS) at 2 000 min^{-1} (2 000 rpm)
Maximum torque	1 170 N·m (119 kgf·m, 861 lbf·ft) at 1 400 min^{-1} (1 400 rpm).
Piston displacement	13.7 l (837 cu in)
Fuel tank capacity	400 l (88 Imp gal, 106 U.S. gal)
Electric system	24V DC. AC generating.

Main and Auxiliary Hoist Mechanism

Both main and auxiliary hoist drums are driven independently by high-torgue variable piston motors through reduction gear. Load hoisting/lowering are done by normal/reverse rotation of motor. Smooth, precise power lowerng is made possible by the hydraulic brake. As a variable-displacement type hydraulic motor is in ues, the motor speed varies automatically with lifting loads.

Clutches Clutches are of the spring-set, hydraulic-released internal-expanding friction band type; main and auxiliary clutches are alike in size and type, with interchangeable clutch linings.

Brakes External contracting friction band-type mechanical brakes, integrated with link lever, operate under normal load. For a lager load, a spring-type boost device is provided to ensure fatigue-free operation. Mechanical brake locks are equipped as standard. Furthermore, while in neutral position the hoist lever is doubly secured in position by a hydraulic brake and an automatic brake. An automatic brake system or hydraulic positive brake system, in neutral position of the hoist lever, can be selected according to job application.

Drums Main and auxiliary hoist drums are of special alloy cast iron. Both hoist drums are mounted on the longtime-lubricated antifriction ball bearings.

Drum Locks Drum pawl locks are provided for integral lock of drums. They are manually controllable from the operator's seat.

Boom Hoist Mechanism

Completely independent operation.
Boom hoisting/lowering is done by normal/reverse rotation of the swash plate type axial piston motor. Boom lowering is made by power lowering through the hydraulic system. Instant hoisting/lowering of boom is possible. Both hydraulic brake and spring-set hydraulic-released multiplate disc type brake offer positive and safe stopping of boom. When boom is hoisted or lowerd brakes are automatically released.

Boom Brakes Spring-set, hydraulic-released multiplate disc type. Brake is automatically actuated when control lever is at neutral position.

Drum Locks Drum pawl lock is manually controlled from operator's seat.

Swing Mechanism

Completely independent operation. Driven by two swash plate type axial piston motors through reduction gear, swing speeds are freely controllable within the 0 to maximum speed with single lever stroking. Swing mechanism offers two-speed selection of swing.

Swing Brake/Swing Parking brake Two spring-set/hydraulic-released multiplate disc type swing brakes can be hydraulically actuated by brake switch on the swing lever. These brake mechanism are used for swing parking brake, too.
In this case, cannot start the engine without the brake switch on position for safety.

Swing Lock Manually operated mechanical lock with a rod tip which is engaged in a holder of track frame during transportation.

Swing Circle Single-row shear-type ball bearing with heat treated internal gear.

Revolving Frame

All steel welded construction, stress-relieved, precision-machined unit, especially designed for rigidity and strength.

Gantry Lowerable for transportation.
Speedy, easy raising/lowering are possible with optional hydraulic cylinders.

Counterweight Welded structure. Total weight 33 400 kg (73 600 lb)

Consists of 6 sections:	One:	17 000 kg	(37 500 lb)
	One:	3 390 kg	(7 470 lb)
	One:	3 380 kg	(7 450 lb)
	One:	3 200 kg	(7 050 lb)
	One:	3 250 kg	(7 170 lb)
	One:	3 140 kg	(6 920 lb)

Boom

Tubular Chord CRANE Boom 1 700 mm (67") wide by, 1 700 mm (67") deep at connection, lattice construction, high tensile strength steel tubular chord.

Basic boom	2-piece, total length 16.0 m (52'6"); upper section 8.0 m (26'3") and lower section 8.0 m (26'3").
Boom point	Offset boom point, 4 sheaves mounted on anti-friction bearings on boom peak. Sheave P.C.D. 600 mm (24") Standard/Optional winches
Boom insert	3.0 m (9'10"), 6.0 m (19'8") and 9.0 m (29'6") long available with appurtenant pendants.
Connection type	Pin-connected.
Boom backstop	Dual-rail, telescopic tubular construction with spring bumper.
Boom hoist bridle	Serves as connection between pendants and boom hoist wire rope reeving, equipped with 6 sheaves [462 mm (18.2") p.c.d] for 12-part boom hoist wire rope reeving.

Operator's Cab

All-weather, well-ventilated, all-round visibility, roomy operator's cab. The completely independent cab is insulated against noise and vibration. Sliding, fold-in front window swings up and stores in roof. Fully adjustable reclining seat.

UNDERCARRIAGE

Traction Mechanism Each track is driven by a swash plate type axial piston motor through reduction gear. The hydraulic motor and reduction mechanism are installed within the width of track link shoe, being referred to as in-shoe type. This mechanism allows counterrotation of tracks for maximum maneuverability in close quarters. When lever is at neutral position, both hydraulic brake and spring-set/hydraulic-released multiplate disc brake are automatically actuated to effect reliable stopping. Upper and lower rollers, sprockets and idlers are lifetime-lubricated. A hydraulic track adjuster is provided for easy tension adjustment of each track.

Track Frame All-welded, stress relieved, box section construction.

Side Frame Side frames of all-welded construction can be retracted for transportation.

Side Frame Removal Device and Self-loading Device (optional)
Both right and left side frames can be speedily removed by side frame removal device (cylinder). And self-loading device allows the machine to load its basic machine onto a trailer through the use of its own hydraulic jack cylinders. Travel motor pipings are connected via self-seal couplings for quick disconnection.

Track Shoes Heat treated alloy steel castings with induction hardened roller path and driving lugs. Shoes are connected by induction-hardened steel pins.

NO. of upper rollers (on each side)	2
NO. of lower rollers (on each side)	10
NO. of track shoes (on each side)	61
Shoe width	940 mm (37")

Track Tension Adjuster Track tension is adjusted by hydraulic power jack at the front idler bearing block and by inserting proper shims.

SALE & RENTAL

HYDRAULIC SYSTEM

2 variable displacement piston pumps + 2 gear pumps hydraulic system allows both independent and combined operations of all functions. Variable-displacement piston pumps not only adequately control opeating speeds, but also utilize engine horsepower to maximum.

	Pump-1	Pump-2
Type of pump	Variable displacement pump	
Pressure setting	310 bar (310 kgf/cm², 4 410 psi)	310 bar (310 kgf/cm², 4 410 psi)
Oil flow	281 l/min (61.8 Imp gpm, 74.2 U.S. gpm)	281 l/min (61.8 Imp gpm, 74.2 U.S. gpm)

	Pump-3 + 4	Pump-5
Type of pump	Gear pump	Gear pump
Pressure setting	185 bar (185 kgf/cm², 2 630 psi)	43 bar (43 kgf/cm², 610 psi)
Oil flow	218 l/min (48.0 Imp gpm, 57.6 U.S. gpm)	42 l/min (9.2 Imp gpm, 11.0 U.S gpm)

Main and Auxiliary Hoist Motor Swash plate type axial piston motor with counterbalance valve.

Boom Hoist Motor Swash plate type axial piston motor with counterbalance valve.

Swing Motor 2 swash plate type axial piston motors.

Travel Motor Swash plate type axial piston motor with brake valve and spring-set/hydraulic-released multiplate disc brake.

Relief and Brake Valves Each hydraulic circuit incorporates large-capacity relief valves to protect circuit from overload or shock load. Counterbalance valves (compensates safe, positive load lowering and prevents accidental load drop when hydraulic power is suddenly reduced) are provided for hoist motor. Brake valves (consisting of relief valve and counterbalance valve) are provided for travel circuit.

Pressure Setting

MAIN CIRCUIT

- Main relief valves
  - Hoist(main and aux.) ..... 310 bar (310 kgf/cm², 4 410 psi)
  - Swing ..... 185 bar (185 kgf/cm², 2 630 psi)
- Overload relief valves
  - Hoist (main and aux.) circuit ..... 310 bar (310 kgf/cm², 4 410 psi)
  - Boom hoist circuit ..... 310 bar (310 kgf/cm², 4 410 psi)
  - Travel circuit ..... 300 bar (300 kgf/cm², 4 270 psi)

PILOT CIRCUIT

- Main relief valve ..... 43 bar (43 kgf/cm², 610 psi)

Line Filters High filtraction 10μ full-flow filter element is provided to keep hydraulic oil clean and ensure long-term, trouble-free operation. Pilot filter and suction filter are provided for each circuit.

SALE & RENTAL

CONTROLS

Boom, Main and Auxiliary Hoist and Travel Remote controlled hydraulic servo. Working speed can be precisely controlled by changing lever stroke.

Swing Mechanical linkage type, featuring smooth, precise swing.

Fuel Control Two foot throttle (accelerator) pedals and hand throttle (accelerator) controls equipped as standard.

Ultra-low Speed Control System Opating speeds for hoisting, boom hoisting/lowering and travel are infinitely variable within a range of 100 to 20% to facilitate alignment, accurate inching and boom detachment under gravity.

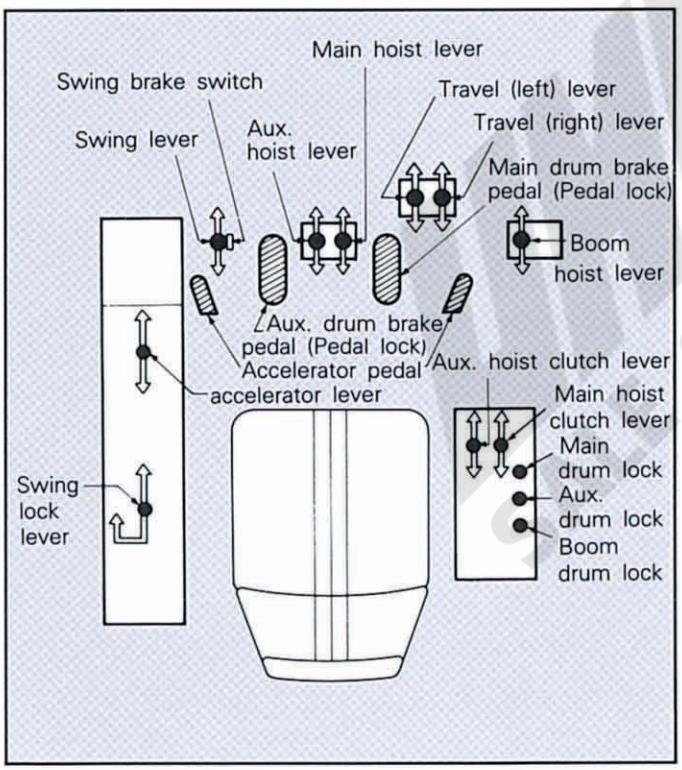

This monitor has the following functions

- **Instruments** Machine conditions are shown on meters.
- **Start up inspection monitor** To check the machine condition and safty device before starting operation.
- **Safety monitor** To warn th abnormality of the machine during operation and carelessness. An additional safety function allows the checking of broken electric wires due to boom and hook overhoist.

SAFETY DEVICES

Boom Angle Indicator Mechanical type boom angle indicator is provided at boom foot.

Counterbalance Valve (Brake Valve) A counterbalance valve is incorporated in travel motors, boom hoist motor, main and auxiliary hoist motor respectivery. In case the hydraulic line is broken, this valve is automatically actuated to prevent motor rotation.

Spring-set/Hydraulic-released Multiplate Disc Type Travel Brakes

Swing Lock and Swing Brake

Drum Lock A pawl type drum lock is adopted for main drum, auxiliary drum and boom drum.

For Lift Crane

- **Moment Limiter**
- **Hook Overhoist Prevention Device** When the hook reaches its safety hoist limit, an alarm bell rings and an auto-stop device automatically actuates at the same time.
- **Boom Overhoist Prevention Device** When the boom reaches its safety angle limit, a buzzer alarm sounds and boom hoisting automatically stops at the same time. A telescopic type boom backstop is also installed.

SERVICE REFILL CAPACITIES

	Liters	Imp gal	U.S gal
Fuel tank	440.0	96.7	116.1
Engine coolant	52.0	11.4	13.7
Engine oil	45.0	9.9	11.9
Pump transmission	1.3	0.29	0.34
Boom hoist motor reduction device	5.0	1.1	1.3
Winch hoist motor reduction device (on each side)	15.0	3.3	4.0
Swing reduction device (on each side)	4.0	0.9	1.1
Travel final device (on each side)	35.0	7.7	9.2
Hydraulic system (including tank capacity)	400.0	87.9	105.5
Hydraulic tank	250.0	54.9	66.0

OPTIONAL EQUIPMENT

Operator's Cab Electric fan, cab cooler.
Drum lugging (for ø28 mm (1.10") rope)
Drum lugging (for ø30 mm (1.18") rope)
Third Drum (Power Lowering)
Auxiliary Jib for Crane Boom Can be attached to the top of main boom for auxiliary hook-hoisting operation.
Hydraulic Gantry Cylinders
Side Frame Removal Device and Self-loading Device
Joystick Lever

FRONT-END ATTACHMENTS AVAILABLE

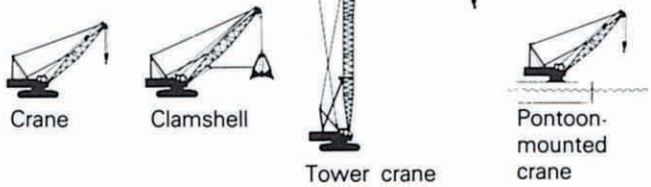

Crane Clamshell Tower crane Pontoon-mounted crane

SALE & RENTAL

KH AND PD SERIES

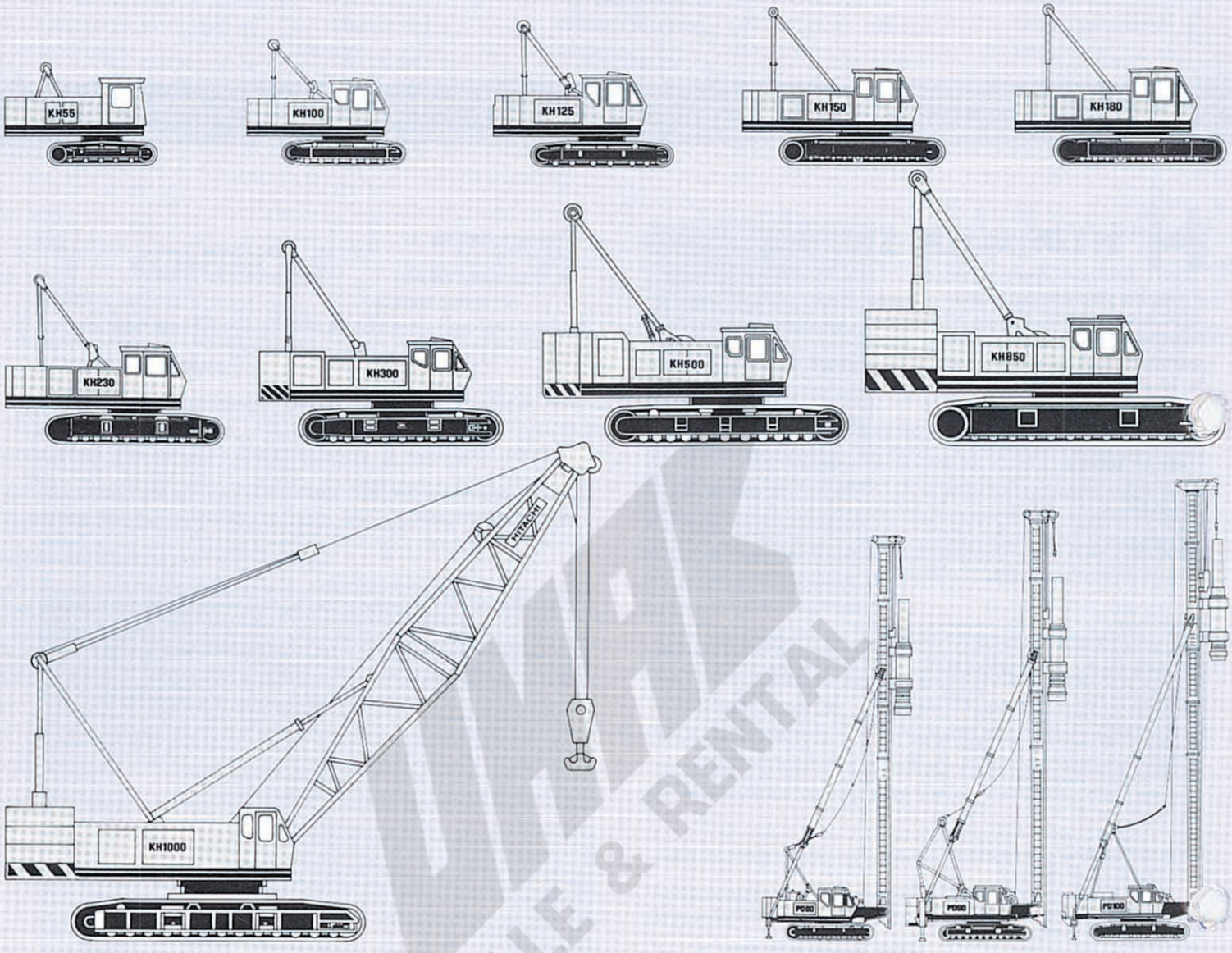

SALE & RENTAL

These specifications are subject to change without notice.

Hitachi Construction Machinery Co., Ltd.

Head Office: Nippon Bldg., No. 6-2, 2-chome, Ohtemachi,
Chiyoda-ku, Tokyo 100, Japan
Telephone: Tokyo (03) 3245-6361
Facsimile: Tokyo (03) 3246-2606
Telex: J32539 HITACONJ
Cable Address: "TOKHITACHIKENKI"

KC-E290M

Printed in Japan YY-R[F,M] (GT3-So, KM-M)