RATED LIFTING CAPACITIES IN POUNDS WITH 8,000 lb COUNTERWEIGHT
37 FT. - 115 FT. BOOM

ON OUTRIGGERS FULLY EXTENDED - OVER REAR

Radius in Feet	#0501								
	Main Boom Length in Feet								
	37	45	55	**63	75	85	95	105	115
10	+80,000 (68.5)	71,500 (72.5)	58,200 (76.5)	49,050 (78.5)					
12	62,000 (65)	59,900 (70)	51,550 (74)	46,200 (76.5)	*33,750 (80)				
15	50,000 (59.5)	50,000 (65.5)	43,800 (71)	39,050 (73.5)	33,750 (77)	*31,750 (80)			
20	37,500 (50)	37,500 (58)	34,250 (65)	30,500 (68.5)	28,400 (73)	26,150 (76)	23,600 (78)	*21,800 (80)	
25	28,000 (38)	28,000 (50)	26,200 (59)	24,600 (63.5)	23,400 (69)	22,050 (72.5)	19,950 (75)	18,450 (77)	*15,050 (80)
30	21,000 (19.5)	21,000 (40.5)	21,000 (52.5)	20,000 (58)	19,250 (65)	18,500 (68.5)	17,100 (71.5)	15,850 (74.5)	15,050 (76.5)
35		15,700 (27.5)	15,700 (45)	15,700 (52.5)	15,700 (60.5)	15,700 (65)	14,900 (68.5)	13,800 (71.5)	13,150 (74)
40			11,200 (36.5)	11,100 (46)	12,050 (55.5)	12,600 (61)	13,050 (65)	12,150 (68.5)	11,600 (71.5)
45	See Note 16		8,820 (25)	8,720 (39)	9,650 (50.5)	10,200 (57)	10,650 (61.5)	10,800 (65.5)	10,350 (68.5)
50				6,840 (30)	7,760 (45)	8,310 (52.5)	8,750 (58)	9,090 (62)	9,280 (65.5)
55				5,320 (17.5)	6,230 (39)	6,780 (48)	7,210 (54)	7,550 (59)	7,830 (63)
60					4,970 (32)	5,520 (43)	5,940 (50)	6,280 (55.5)	6,560 (60)
65					3,910 (22)	4,460 (37)	4,880 (45.5)	5,210 (52)	5,490 (56.5)
70						3,550 (30.5)	3,970 (41)	4,310 (48)	4,580 (53.5)
75						2,780 (21.5)	3,190 (35.5)	3,530 (44)	3,800 (50)
80							2,520 (29)	2,850 (39.5)	3,120 (46.5)
85							1,920 (20.5)	2,250 (34)	2,520 (42.5)
90								1,730 (28)	1,990 (38)
95								1,260 (20)	1,520 (33.5)
100									1,100 (27.5)
Min. boom angle (deg.) for indicated length (no load)									14
Max. boom length (ft.) at 0 degree boom angle (no load)									105

Note: ( ) Boom angles are in degrees.
LMI operating code. Refer to LMI manual for operating instructions.
* This capacity is based on maximum boom angle.
** 63 ft. boom length is with inner mid fully extended and outer mid & fly retracted.
+ 9 parts line required to lift this capacity (using auxiliary boom nose). Refer to Operator's & Safety Handbook for reeving diagram.

Lifting Capacities At Zero Degree Boom Angle On Outriggers Fully Extended - Over Rear									
Boom Angle	Main Boom Length in Feet								
	37	45	55	**63	75	85	95		
0 deg.	19,250 (30.8)	12,000 (38.8)	7,310 (48.8)	4,810 (56.8)	3,200 (68.8)	2,250 (78.8)	1,510 (88.8)		

RATED LIFTING CAPACITIES IN POUNDS WITH 8,000 lb COUNTERWEIGHT
37 FT. - 115 FT. BOOM

ON OUTRIGGERS FULLY EXTENDED - 360°

Radius in Feet	#0501								
	Main Boom Length in Feet								
	37	45	55	**63	75	85	95	105	115
10	+80,000 (68.5)	71,500 (72.5)	58,200 (76.5)	49,050 (78.5)					
12	62,000 (65)	59,900 (70)	51,550 (74)	46,200 (76.5)	*33,750 (80)				
15	50,000 (59.5)	50,000 (65.5)	43,800 (71)	39,050 (73.5)	33,750 (77)	*31,750 (80)			
20	37,500 (50)	37,500 (58)	34,250 (65)	30,500 (68.5)	28,400 (73)	26,150 (76)	23,600 (78)	*21,800 (80)	
25	28,000 (38)	28,000 (50)	26,200 (59)	24,600 (63.5)	23,400 (69)	22,050 (72.5)	19,950 (75)	18,450 (77)	*15,050 (80)
30	21,000 (19.5)	21,000 (40.5)	20,400 (52.5)	19,850 (58)	19,250 (65)	18,500 (68.5)	17,100 (71.5)	15,850 (74.5)	15,050 (76.5)
35		15,450 (27.5)	15,000 (45)	14,450 (52.5)	15,200 (60.5)	15,700 (65)	14,900 (68.5)	13,800 (71.5)	13,150 (74)
40			11,100 (36.5)	10,900 (46)	11,600 (55.5)	12,250 (61)	12,750 (65)	12,150 (68.5)	11,600 (71.5)
45	See Note 16		8,420 (25)	8,290 (39)	9,050 (50.5)	9,680 (57)	10,100 (61.5)	10,550 (65.5)	10,350 (68.5)
50				6,260 (30)	7,120 (45)	7,740 (52.5)	8,140 (58)	8,550 (62)	8,970 (65.5)
55				4,640 (17.5)	5,570 (39)	6,240 (48)	6,600 (54)	6,970 (59)	7,360 (63)
60					4,320 (32)	4,930 (43)	5,360 (50)	5,710 (55.5)	6,070 (60)
65					3,230 (22)	3,830 (37)	4,290 (45.5)	4,660 (52)	4,960 (56.5)
70						2,910 (30.5)	3,360 (41)	3,730 (48)	4,020 (53.5)
75						2,120 (21.5)	2,570 (35.5)	2,930 (44)	3,230 (50)
80							1,890 (29)	2,250 (39.5)	2,540 (46.5)
85							1,300 (20.5)	1,650 (34)	1,940 (42.5)
90								1,130 (28)	1,420 (38)
Min. boom angle (deg.) for indicated length (no load)							4	22	29
Max. boom length (ft.) at 0 degree boom angle (no load)							85		

Note: ( ) Boom angles are in degrees.
LMI operating code. Refer to LMI manual for operating instructions.
* This capacity is based on maximum boom angle.
** 63 ft. boom length is with inner mid fully extended and outer mid & fly retracted.
+ 9 parts line required to lift this capacity (using auxiliary boom nose). Refer to Operator's & Safety Handbook for reeving diagram.

Lifting Capacities At Zero Degree Boom Angle On Outriggers Fully Extended - 360°									
Boom Angle	Main Boom Length in Feet								
	37	45	55	**63	75	85			
0 deg.	19,250 (30.8)	12,000 (38.8)	6,760 (48.8)	4,110 (56.8)	2,510 (68.8)	1,590 (78.8)			

Note: ( ) Reference radii in feet.

A6-829-100607

RATED LIFTING CAPACITIES IN POUNDS WITH 8,000 lb COUNTERWEIGHT
30 FT. - 54 FT. FOLDING EXTENSION

ON OUTRIGGERS FULLY EXTENDED - OVER REAR

Radius in Feet	30 FT. LENGTH			54 FT. LENGTH		
	#0521	#0522	#0523	#0541	#0542	#0543
	0° OFFSET	25° OFFSET	45° OFFSET	0° OFFSET	25° OFFSET	45° OFFSET
30	*8,510 (80)					
35	8,510 (78)					
40	8,510 (76)	*8,000 (80)		*5,010 (80)		
45	7,450 (73.5)	7,900 (78)	*4,500 (80)	5,010 (78.5)		
50	6,560 (71.5)	7,340 (75.5)	4,410 (78)	5,010 (77)		
55	5,800 (69.5)	6,500 (73.5)	4,340 (76)	5,010 (75)		
60	5,140 (67.5)	5,770 (71)	4,270 (73.5)	5,010 (73)	*3,840 (80)	
65	4,560 (65)	5,130 (69)	4,220 (71)	4,470 (71.5)	3,640 (78)	
70	4,060 (62.5)	4,570 (66.5)	4,170 (69)	3,990 (69.5)	3,490 (76)	*2,200 (80)
75	3,610 (60.5)	4,070 (64.5)	4,130 (66.5)	3,570 (67.5)	3,340 (74)	2,100 (77.5)
80	3,210 (58)	3,620 (62)	4,100 (64)	3,180 (65.5)	3,220 (72)	2,050 (75)
85	2,860 (55.5)	3,210 (59.5)	3,740 (61)	2,840 (63.5)	3,100 (70)	2,000 (73)
90	2,520 (53)	2,840 (56.5)	3,380 (58.5)	2,530 (61.5)	3,000 (68)	1,970 (71)
95	2,190 (50)	2,490 (54)	2,850 (55.5)	2,250 (59.5)	2,800 (66)	1,940 (68.5)
100	1,820 (47.5)	2,140 (51)		1,990 (57.5)	2,490 (63.5)	1,920 (66.5)
105	1,440 (44.5)	1,760 (48)		1,750 (55)	2,200 (61.5)	1,910 (64)
110	1,090 (41)	1,370 (45)		1,500 (53)	1,930 (59)	1,900 (61.5)
115				1,140 (50.5)	1,670 (56.5)	1,890 (58.5)
120					1,400 (54)	
125					1,140 (51.5)	
No Load Stability Data						
Minimum boom angle (deg.) for indicated length	39	40	45	47	48	48
Maximum boom length (ft.) at 0° boom angle	85			75		

NOTE: ( ) Boom angles are in degrees. A6-829-100612
#LMI operating code. Refer to LMI manual for operating instructions.
*This capacity is based on maximum boom angle.

1. All capacities above the bold line are based on structural strength of boom extension and do not exceed 85% of tipping loads, in accordance with SAE J-765.
2. 30 ft. extension length may be used for single or double line lifting service; the 54 ft. extension length may be used for single line lifting service only.
3. For main boom lengths less than 115 ft. with boom extension erected, the rated loads are determined by boom angle using the 115 ft. chart. Use only the column which corresponds to the boom extension length and offset for which the machine is set up. For boom angles not shown, use rating of the next lower boom angle.
4. **WARNING:** Operation of this machine with heavier loads than the capacities listed is strictly prohibited. Machine tipping with boom extension occurs rapidly and without advance warning.
5. Boom angle is the angle above or below horizontal of the longitudinal axis of the boom base section after lifting rated load.
6. Capacities listed are with outriggers properly extended and vertical jacks set only.

RATED LIFTING CAPACITIES IN POUNDS WITH 8,000 lb COUNTERWEIGHT
30 FT. - 54 FT. FOLDING EXTENSION

ON OUTRIGGERS FULLY EXTENDED - 360°

Radius in Feet	30 FT. LENGTH			54 FT. LENGTH		
	#0521	#0522	#0523	#0541	#0542	#0543
	0° OFFSET	25° OFFSET	45° OFFSET	0° OFFSET	25° OFFSET	45° OFFSET
30	*8,510 (80)					
35	8,510 (78)					
40	8,510 (76)	*8,000 (80)		*5,010 (80)		
45	7,450 (73.5)	7,900 (78)	*4,500 (80)	5,010 (78.5)		
50	6,560 (71.5)	7,340 (75.5)	4,410 (78)	5,010 (77)		
55	5,800 (69.5)	6,500 (73.5)	4,340 (76)	5,010 (75)		
60	5,140 (67.5)	5,770 (71)	4,270 (73.5)	5,010 (73)	*3,840 (80)	
65	4,560 (65)	5,130 (69)	4,220 (71)	4,470 (71.5)	3,640 (78)	
70	4,060 (62.5)	4,570 (66.5)	4,170 (69)	3,990 (69.5)	3,490 (76)	*2,200 (80)
75	3,610 (60.5)	4,070 (64.5)	4,130 (66.5)	3,570 (67.5)	3,340 (74)	2,100 (77.5)
80	2,650 (58)	3,130 (62)	3,490 (64)	3,060 (65.5)	3,220 (72)	2,050 (75)
85	2,140 (55.5)	2,570 (59.5)	2,880 (61)	2,530 (63.5)	3,100 (70)	2,000 (73)
90	1,690 (53)	2,070 (56.5)	2,350 (58.5)	2,080 (61.5)	2,920 (68)	1,970 (71)
95	1,300 (50)	1,630 (54)	1,860 (55.5)	1,670 (59.5)	2,440 (66)	1,940 (68.5)
100		1,240 (51)		1,320 (57.5)	2,020 (63.5)	1,920 (66.5)
105				1,000 (55)	1,640 (61.5)	1,910 (64)
110					1,290 (59)	1,900 (61.5)
						1,890 (58.5)
No Load Stability Data						
Minimum boom angle (deg.) for indicated length	46	47	47	53	54	54
Maximum boom length (ft.) at 0° boom angle	63			55		

NOTE: ( ) Boom angles are in degrees.
#LMI operating code. Refer to LMI manual for operating instructions.
*This capacity is based on maximum boom angle.

A6-829-100611

1. All capacities above the bold line are based on structural strength of boom extension and do not exceed 85% of tipping loads, in accordance with SAE J-765.
2. 30 ft. extension length may be used for single or double line lifting service; the 54 ft. extension length may be used for single line lifting service only.
3. For main boom lengths less than 115 ft. with boom extension erected, the rated loads are determined by boom angle using the 115 ft. chart. Use only the column which corresponds to the boom extension length and offset for which the machine is set up. For boom angles not shown, use rating of the next lower boom angle.
4. **WARNING:** Operation of this machine with heavier loads than the capacities listed is strictly prohibited. Machine tipping with boom extension occurs rapidly and without advance warning.
5. Boom angle is the angle above or below horizontal of the longitudinal axis of the boom base section after lifting rated load.
6. Capacities listed are with outriggers properly extended and vertical jacks set only.

GROVE®
CRANE

TMS540

6 x 4 & 6 x 6

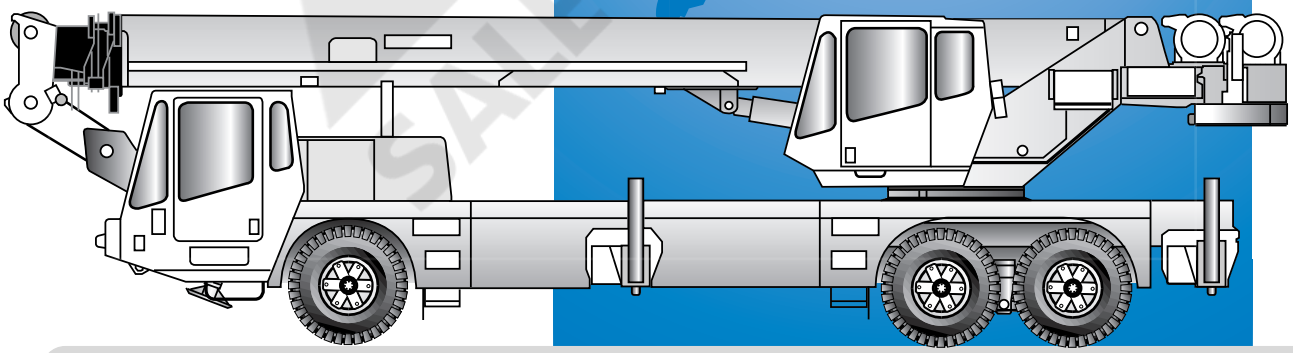

Truck Mounted Hydraulic Crane

Dimensions

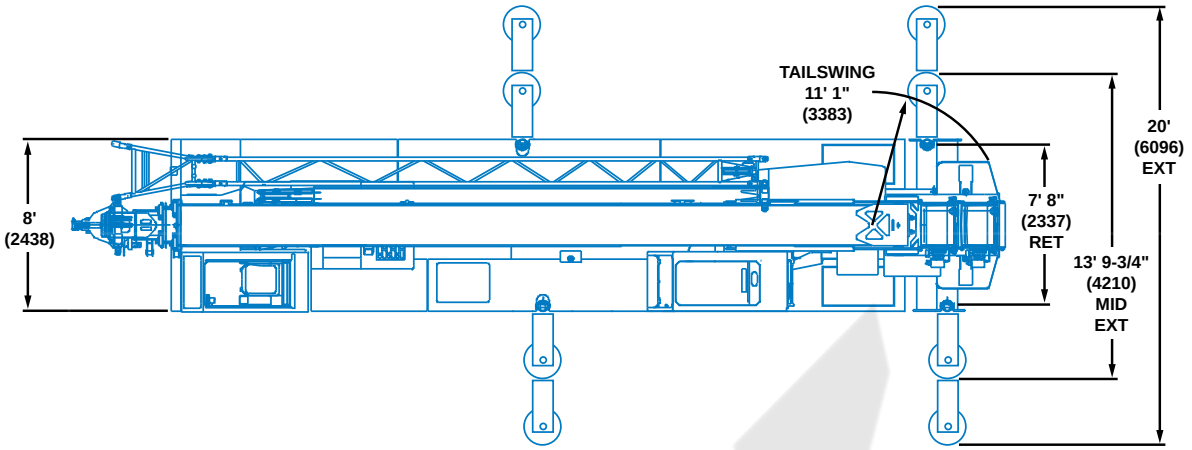

Note: ( ) Reference dimensions in mm

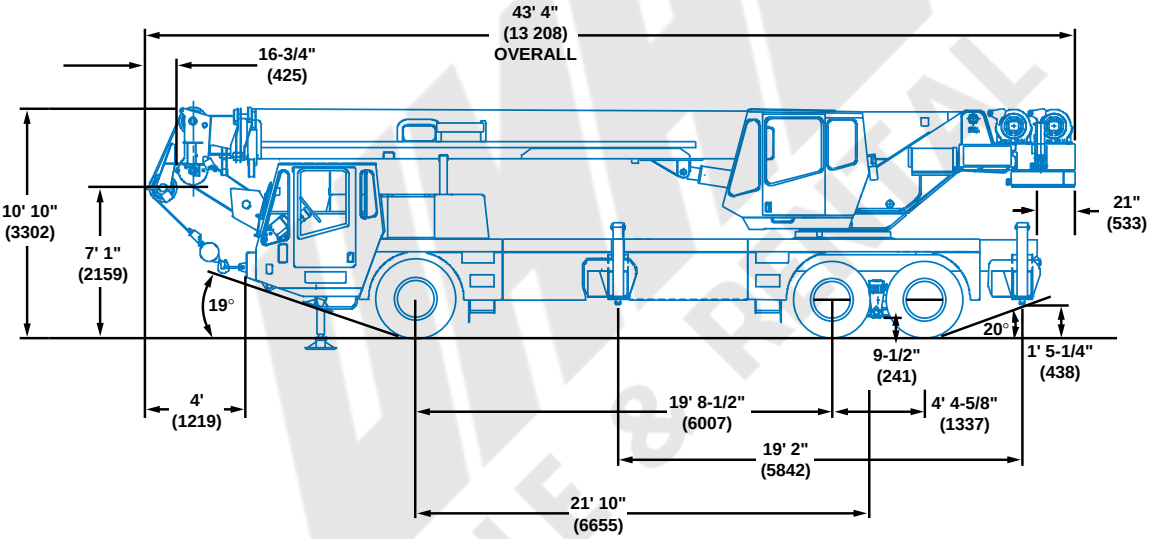

TMS 540 6 X 4

Curb Clearance . . . . . 40’ 10” (12 446 mm)

Clearance Radius . . . . . 47’ (14 326 mm)

TMS 540 6 X 6

Curb Clearance . . . . . 47’ 3” (14 402 mm)

Clearance Radius . . . . . 52’ 3” (15 926 mm)

Working range

37 - 90 ft. (11.2 - 27.4 m)	30 - 54 ft. (9.1 - 16.4 m)	6,000 lbs. (2722 kg)	100%	360°

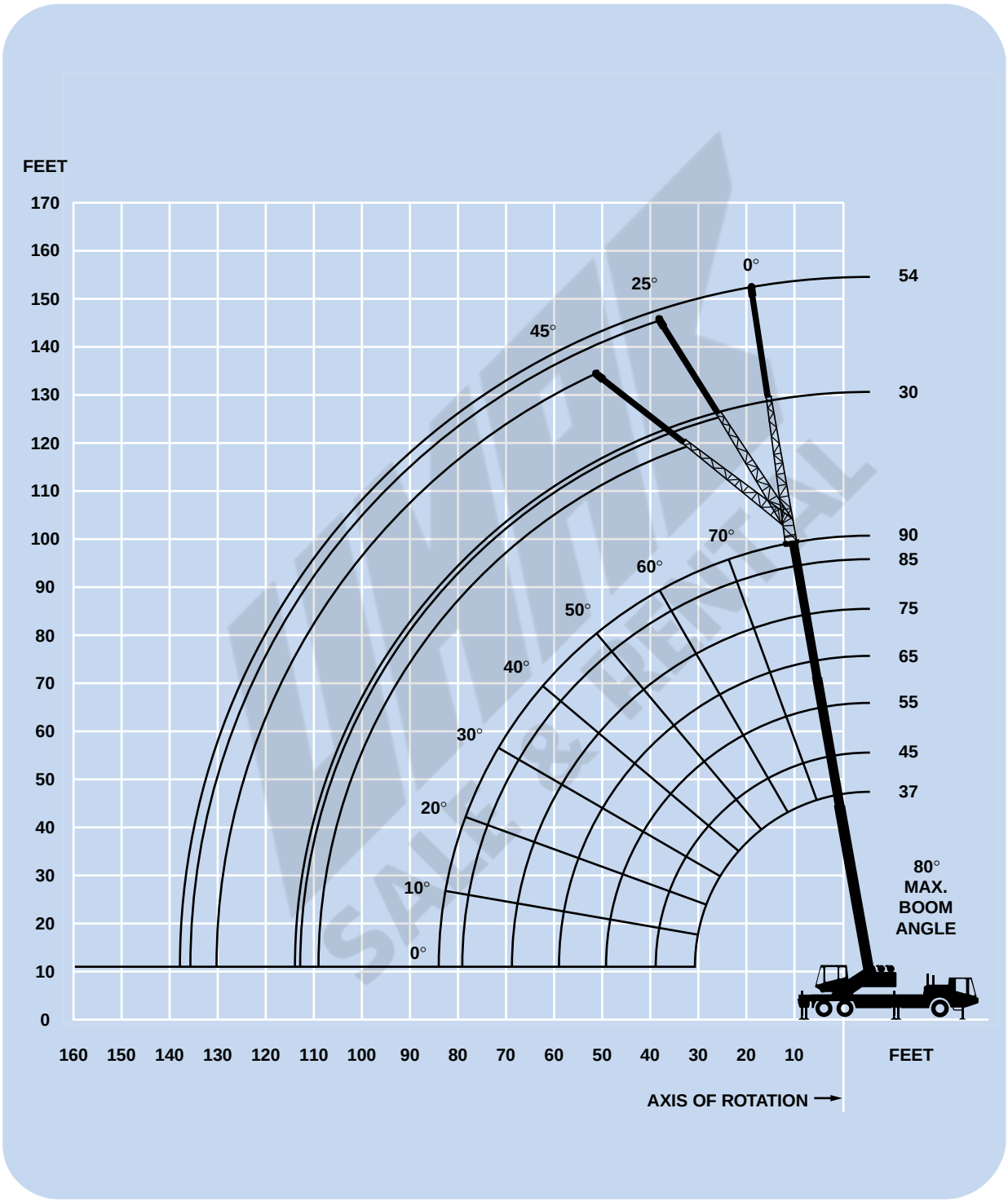

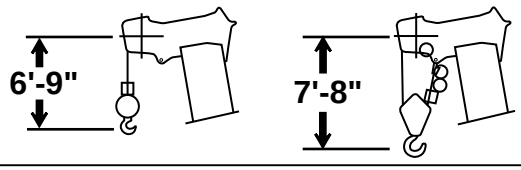

DIMENSIONS ARE FOR LARGEST GROVE FURNISHED HOOK BLOCK AND HEADACHE BALL, WITH ANTI-TWO BLOCK ACTIVATED.

Superstructure specifications

Boom
37 ft. - 90 ft. (11.2 m - 27.4 m) three-section, full power boom. Maximum tip height: 98 ft. (29.8 m).

*Optional Boom
37 ft. - 115 ft. (11.2 m - 35 m) four-section, full power boom. Maximum tip height: 123 ft. (37.5 m).

Folding Swingaway Extension
30 ft. - 54 ft. (9.1 m - 16.4 m) folding lattice swingaway extension offsettable at 0°, 25° and 45°. Stows alongside base boom section.
Maximum tip height: 152 ft. (46.4 m) standard boom, 177 ft. (53.9 m) optional boom.

*Optional Folding Swingaway Extension
30 ft. (9.1 m) lattice swingaway boom extension offsettable at 0°, 25° and 45°. Stows alongside base boom section.
Maximum tip height: 128 ft. (39.2 m) standard boom, 153 ft. (46.7 m) optional boom.

Boom Nose
Four nylatron sheaves mounted on heavy duty tapered roller bearings with removable pin-type rope guards. Quick reeve boom nose.*Optional removable auxiliary boom nose with removable pin type rope guard, required for 40 ton capacity with 5:1 safety factor for hoist cable.

Boom Elevation
One double acting hydraulic cylinder with integral holding valve provides elevation from -3° to 80°.

Load Moment & Anti-Two Block System
A load moment and anti-two block system with audio-visual warning, control lever lockout, and graphic display. These systems provide electronic display of boom angle, length, radius, tip height, relative load moment, maximum permissible load, and warning of impending two-block conditions.

Cab
Full vision, galvannealed, steel fabricated with accoustical lining and tinted safety glass throughout. Deluxe seat incorporates armrest mounted single axis, electronic controls. Dash panel incorporates gauges for all engine functions. Other standard features include: sliding side and rear windows, variable speed electric windshield washer-wiper, circulating air fan, hot water heater, sliding skylight with two speed electric skylight washer-wiper, swing horn, fire extinguisher, cab mounted worklights, one cell phone power outlet, seat belt, and hoist mirror.

Swing
Planetary swing with foot applied multi-disc wet brake. Spring applied, hydraulically released parking brake, plunger type, mechanical house lock, and 360° house lock, all operated from the cab.
Maximum speed: 3.0 RPM (no load).

Counterweight
One hydraulically removable section @ 2,000 lbs. (907 kg), as standard equipment pinned to turntable. *Additional optional 2,000 lbs. slabs may be added to provide a total of 4,000 lbs. (1814 kg) or 6,000 lbs. (2722 kg).

Hydraulic System
One axial piston variable displacement pump and 2 single section gear pumps with a combined output of 110 G.P.M. (416 lpm) driven by two carrier transmission mounted P.T.O.'s. Electric pump disconnect for travel.

Return line type filter with full flow by-pass protection and service indicator. Replaceable cartridge with micron filtration rating of 3/5/10, (ISO CODE 16/13).
Reservoir capacity: 111 gal. (420 L).

Remote-mounted oil cooler with thermostatically controlled electric motor driven fan.

Hoist Specifications
Main and *Auxiliary Hoist - HO20A-23G
Planetary reduction with automatic spring applied mulit-disc brake. Variable speed, up and down. Grooved drum with integral electronic hoist drum rotation indicator.

Maximum Single Line Speed:

(1st Layer)	309 FPM (94 m/min)
(2nd Layer)	336 FPM (102 m/min)
(3rd Layer)	363 FPM (111 m/min)
(4th Layer)	390 FPM (119 m/min)

Maximum Single Line Pull:

(1st Layer)	11,819 lbs. (5361 kg)
(2nd Layer)	10,871 lbs. (4931 kg)
(3rd Layer)	10,064 lbs. (4565 kg)
(4th Layer)	9,369 lbs. (4250 kg)

Maximum Single Line Pull:
9,080 lbs. (4119 kg) with 5:1 safety factor

Wire rope: 5/8 in. (16 mm) x 500 ft. (152 m) 18 x 19

Maximum rope stowage: 530 ft. (161.5 m)

Denotes optional equipment

Carrier specifications - TMS 6 x 4 & 6 x 6

Chassis
Box section frame fabricated from high-strength, alloy steel. Integral outrigger housings and front/rear towing and tie down lugs.

Outrigger System
Hydraulic single-stage, double box beam outriggers with front stabilizer and inverted jack design; equipped with integral holding valves. Three position with fully extended, intermediate (50%) extended and fully retracted settings. Steel fabricated, self-stowing type outrigger pads, 16 in. (406 mm) square, self stowing steel outrigger pads and a permanently stowed, front center stabilizer pad, aluminum.

Outrigger Controls
Located in the superstructure cab on the left side (umbilical design), requires two hand operation. Crane level indicator (sight bubble) on right side console.

Engine
Caterpillar 3126B HUEI, six cylinder, turbocharged and after cooled diesel, 439 cu. in. (7.19 L) 300 bhp (224 kW) (gross) @ 2,200 RPM.
Maximum torque: 800 ft. lbs. (1085 Nm) @ 1,400 RPM.

Fuel Tank Capacity
60 gallons (227 L).

Electrical System
Two 12 V low maintenance batteries. 24 V system with 12 V headlights. Battery disconnect in battery box compartment.

Drive
6 x 4 x 2 standard, *optional 6 x 6 x 2.

Steering
Front axles, mechanical with hydraulic power assist controlled by steering wheel.

Transmission
Allison automatic 6 speeds forward and 1 reverse.

TMS 6 x 4 Axles
Front: (1) Rockwell, beam type steering axle, 82.8 in. (2.10 m) track. Capacity: 21,000 lbs. (9526 kg)
Rear: (2) Rockwell single reduction drive, 72.25 in. (1.84 m) track. Inter-axle differential lock. Capacity: 41,000 lbs. (18 598 kg).

Transfer Case
Meritor single speed with front axle disconnect.

TMS 6 x 6 Axles
Front: (1) Kessler, single reduction steering axle, 82.8 in. (2.10 m) track. Capacity: 22,000 lbs. (9979 kg)
Rear: (2) Rockwell single reduction drive, 72.25 in. (1.84 m) track. Inter-axle and cross-axle differential lock. Capacity: 41,000 lbs. (18 598 kg).

TMS 6 x 4 Brakes
S-cam, dual line air system operating on all wheels. Spring-applied, air released parking brake acting on rear axles. Air dryer standard.

TMS 6 x 6 Brakes
Wedge brakes on front the front axles and S-cam brakes on the rear axles. Dual line air system operating on all wheels. Spring-applied, air released parking brake acting on rear axles. Air dryer standard.

Tires
Standard Front: 425/65R22.5 (6 x 4), 445/65R22.5 (6 x 6) radial highway tread tubeless singles.
Standard Rear: 11R22.5 (6 x 4), 12R22.5 (6 x 6) highway tread tube type duals.

Suspension
Front: Spring mounted single axle with shock absorbers.
Rear: Spring over equalizing beam.

Lights
Full carrier lighting package including front/mid/rear turn indicators, head and tail lights, brake and hazard warning lights, daytime running lights.

Cab
One man design, galvannealed steel fabricated with fiberglass outer shell cab door, accoustical lining and tinted safety glass throughout. Deluxe fabric covered, fully adjustable air ride seat with armrests. Complete driving controls and engine instrumentation including tilt telescope steering wheel, tachometer, speedometer, voltmeter, water temp., oil pressure, fuel level, dual air pressure gauges with A/V warning, engine high temp./low oil pressure/low coolant A/V warning. Other standard items include hot water heater/defroster, electric variable speed windshield washer and wiper, electric door window, fire extinguisher, seat belt, door and window locks, and two power outlets for cell phone or fax machine.

Maximum Speed
6 x 4 - 65 MPH (105 kph), 6 x 6 - 62 MPH (100 kph).

Gradeability (Theoretical)
30% (Based on 60,000 lbs. [27 215 kg] GVW).

Gross Vehicle Weight
Basic 6 x 4 unit 54,000 lbs. (24 494 kg).
Basic 6 x 6 unit 56,000 lbs. (25 402 kg).

Miscellaneous Standard Equipment
Full width aluminum fenders with rear fender storage wells, dual electric, remote controlled, heated, rear view mirrors, electronic back-up alarm, aluminum sling/tool box, fiberglass engine hood, electric controlled pump disconnect, permanently lubed drivelines, tire inflation kit, battery disconnect, air cleaner restriction indicator, block and ball stowage, chrome muffler stack, aluminum front/rear wheels (outer rear only).

Denotes optional equipment

Weights

TMS540 6 x 4

ALLOWABLE TRAVEL WEIGHTS	FRONT 21,000 lbs. (9526 kg)	REAR 41,000 lbs. (18 598 kg)	GROSS 62,000 lbs. (28 124 kg)
BASE MACHINE WITH 90 FT. BOOM, W/O CWT.	FRONT 17,518 lbs. (7946 kg)	REAR 30,351 lbs. (13 767 kg)	GROSS 47,869 lbs. (21 713 kg)
SUBSTITUTE: 115 FOOT 4 SECTION BOOM	2,169 lbs. (984 kg)	1,048 lbs. (475 kg)	3,217 lbs. (1459 kg)
30 - 54 FT. FOLDING S/A, INCLUDES BRACKETS	1,817 lbs. (824 kg)	584 lbs. (265 kg)	2,401 lbs. (1089 kg)
45 TON HOOKBLOCK TIED AT BUMPER	886 lbs. (402 kg)	-267 lbs. (-121 kg)	619 lbs. (281 kg)
22 TON HOOKBLOCK STOWED ON DECK	415 lbs. (188 kg)	145 lbs. (66 kg)	560 lbs. (254 kg)
7.5 TON HEADACHE BALL STOWED ON DECK	232 lbs. (105 kg)	106 lbs. (48 kg)	338 lbs. (153 kg)
AUX. BOOM NOSE	192 lbs. (87 kg)	-65 lbs. (-29 kg)	127 lbs. (58 kg)
AUX. HOIST W/CABLE	-140 lbs. (-64 kg)	504 lbs. (229 kg)	364 lbs. (165 kg)
TOW CABLE (STD.)	24 lbs. (11 kg)	-4 lbs. (-2 kg)	20 lbs. (9 kg)
200 LB. DRIVER IN CARRIER CAB	233 lbs. (106 kg)	-33 lbs. (-15 kg)	200 lbs. (91 kg)
SUBSTITUTE: 445/65R 22.5 FRONT TIRES	44 lbs. (20 kg)	0 lbs. (0 kg)	44 lbs. (20 kg)
SUBSTITUTE: 12R22.5 REAR TIRES	0 lbs. (0 kg)	154 lbs. (70 kg)	154 lbs. (70 kg)
AIR CONDITIONING - S/S CAB	-2 lbs. (-1 kg)	287 lbs. (130 kg)	285 lbs. (129 kg)
AIR CONDITIONING - CARRIER CAB	99 lbs. (45 kg)	-11 lbs. (-5 kg)	88 lbs. (40 kg)
2,000 LB. CWT. ON S/S	-715 lbs. (-324 kg)	2,715 lbs. (1231 kg)	2,000 lbs. (907 kg)
2,000 LB. CWT. ON CARRIER	1,005 lbs. (456 kg)	995 lbs. (451 kg)	2,000 lbs. (907 kg)
4,000 LB. CWT. ON CARRIER	2,009 lbs. (911 kg)	1,991 lbs. (903 kg)	4,000 lbs. (1814 kg)
4,000 LB. CWT. ON S/S	-1,429 lbs. (-648 kg)	5,429 lbs. (2463 kg)	4,000 lbs. (1815 kg)
6,000 LB. CWT. ON CARRIER	3,014 lbs. (1367 kg)	2,986 lbs. (1354 kg)	6,000 lbs. (2721 kg)
6,000 LB. CWT. ON S/S	-2,144 lbs. (-973 kg)	8,144 lbs. (3694 kg)	6,000 lbs. (2721 kg)

TMS540 6 x 6

ALLOWABLE TRAVEL WEIGHTS	FRONT 22,000 lbs. (9979 kg)	REAR 41,000 lbs. (18 598 kg)	GROSS 63,000 lbs. (28 577 kg)
BASE MACHINE WITH 90 FT. BOOM, W/O CWT.	FRONT 18,682	REAR 30,684	GROSS 49,366
SUBSTITUTE: 115 FOOT 4 SECTION BOOM	2,169 lbs. (984 kg)	1,048 lbs. (475 kg)	3,217 lbs. (1459 kg)
30 - 54 FT. FOLDING S/A, INCLUDES BRACKETS	1,817 lbs. (824 kg)	584 lbs. (265 kg)	2,401 lbs. (1089 kg)
45 TON HOOKBLOCK TIED AT BUMPER	886 lbs. (402 kg)	-267 lbs. (-121 kg)	619 lbs. (281 kg)
22 TON HOOKBLOCK STOWED ON DECK	415 lbs. (188 kg)	145 lbs. (66 kg)	560 lbs. (254 kg)
7.5 TON HEADACHE BALL STOWED ON DECK	232 lbs. (105 kg)	106 lbs. (48 kg)	338 lbs. (153 kg)
AUX. BOOM NOSE	192 lbs. (87 kg)	-65 lbs. (-29 kg)	127 lbs. (58 kg)
AUX. HOIST W/CABLE	-140 lbs. (-64 kg)	504 lbs. (229 kg)	364 lbs. (165 kg)
TOW CABLE (STD.)	24 lbs. (11 kg)	-4 lbs. (-2 kg)	20 lbs. (9 kg)
200 LB. DRIVER IN CARRIER CAB	233 lbs. (106 kg)	-33 lbs. (-15 kg)	200 lbs. (91 kg)
AIR CONDITIONING - S/S CAB	-2 lbs. (-1 kg)	287 lbs. (130 kg)	285 lbs. (129 kg)
AIR CONDITIONING - CARRIER CAB	99 lbs. (45 kg)	-11 lbs. (-5 kg)	88 lbs. (40 kg)
2,000 LB. CWT. ON S/S	-715 lbs. (-324 kg)	2,715 lbs. (1231 kg)	2,000 lbs. (907 kg)
2,000 LB. CWT. ON CARRIER	1,005 lbs. (456 kg)	995 lbs. (451 kg)	2,000 lbs. (907 kg)
4,000 LB. CWT. ON CARRIER	2,009 lbs. (911 kg)	1,991 lbs. (903 kg)	4,000 lbs. (1814 kg)
4,000 LB. CWT. ON S/S	-1,429 lbs. (-648 kg)	5,429 lbs. (2463 kg)	4,000 lbs. (1815 kg)
6,000 LB. CWT. ON CARRIER	3,014 lbs. (1367 kg)	2,986 lbs. (1354 kg)	6,000 lbs. (2721 kg)
6,000 LB. CWT. ON S/S	-2,144 lbs. (-973 kg)	8,144 lbs. (3694 kg)	6,000 lbs. (2721 kg)

NOTES: Weights may vary 3% due to manufacturing tolerances

37 - 90 ft.
(11.2 - 27.4 m)

6,000 lbs.
(2722 kg)

100%

OVER REAR

Pounds

Feet	37	45	55	65	75	85	90
10	+80,000 (68.5)	64,650 (72.5)	55,500 (76.5)	47,150 (79)			
12	62,000 (65)	58,350 (70)	50,500 (74)	42,550 (77.5)	*39,700 (80)		
15	50,000 (59.5)	50,000 (65.5)	43,450 (71)	37,100 (74.5)	34,600 (77)	*29,000 (80)	*23,500 (80)
20	37,500 (50)	37,500 (58)	35,550 (65)	30,400 (70)	28,400 (73)	26,850 (76)	23,500 (77)
25	28,000 (38)	28,000 (50)	28,000 (59)	25,600 (65)	23,950 (69)	22,650 (72.5)	20,400 (74)
30	20,850 (19.5)	21,000 (40.5)	21,000 (52.5)	21,000 (59.5)	20,550 (65)	19,500 (68.5)	17,500 (70.5)
35		16,250 (27.5)	16,600 (45)	16,850 (54)	17,000 (60.5)	17,000 (65)	15,250 (67)
40			13,100 (36.5)	13,450 (48.5)	13,650 (55.5)	13,900 (61)	13,450 (63)
45			10,600 (25)	10,900 (41.5)	11,200 (50.5)	11,400 (57)	11,500 (59.5)
50				8,950 (34)	9,230 (45)	9,500 (52.5)	9,600 (55.5)
55				7,410 (23.5)	7,690 (39)	7,960 (48)	8,080 (51)
60					6,440 (32)	6,700 (43)	6,810 (46.5)
65					5,410 (22)	5,670 (37)	5,770 (42)
70						4,800 (30.5)	4,890 (36)
75						4,060 (21.5)	4,140 (29.5)
80							3,500 (21)
Min. boom angle (deg.) for indicated length (no load)							0
Max. boom length (ft.) at 0 degree boom angle (no load)							90

NOTE: ( ) Boom angles are in degrees.
*This capacity is based on maximum boom angle.
+9 parts line required to lift this capacity (using auxiliary boom nose).

Boom Angle	37	45	55	65	75	85	90
0°	19,250 (30.8)	13,500 (38.8)	9,070 (48.8)	6,440 (58.8)	4,730 (68.8)	3,560 (78.8)	3,060 (83.8)

NOTE: ( ) Reference radii in feet.

A6-829-016421

SALE & RENTAL

THIS CHART IS ONLY A GUIDE AND SHOULD NOT BE USED TO OPERATE THE CRANE. The individual crane's load chart, operating instructions and other instructional plates must be read and understood prior to operating the crane.

37 - 90 ft.
(11.2 - 27.4 m)

6,000 lbs.
(2722 kg)

100%

360°

Pounds

Feet	37	45	55	65	75	85	90
10	+80,000 (68.5)	64,650 (72.5)	55,500 (76.5)	47,150 (79)			
12	62,000 (65)	58,350 (70)	50,500 (74)	42,550 (77.5)	*39,700 (80)		
15	50,000 (59.5)	50,000 (65.5)	43,450 (71)	37,100 (74.5)	34,600 (77)	*29,000 (80)	*23,500 (80)
20	37,500 (50)	37,500 (58)	35,550 (65)	30,400 (70)	28,400 (73)	26,850 (76)	23,500 (77)
25	28,000 (38)	28,000 (50)	28,000 (59)	25,600 (65)	23,950 (69)	22,650 (72.5)	20,400 (74)
30	19,700 (19.5)	20,300 (40.5)	20,600 (52.5)	20,600 (59.5)	20,300 (65)	19,500 (68.5)	17,500 (70.5)
35		15,200 (27.5)	15,500 (45)	15,500 (54)	15,700 (60.5)	15,450 (65)	15,250 (67)
40			12,000 (36.5)	12,150 (48.5)	12,250 (55.5)	12,450 (61)	12,450 (63)
45			9,600 (25)	9,710 (41.5)	9,870 (50.5)	10,000 (57)	10,000 (59.5)
50				7,840 (34)	8,050 (45)	8,180 (52.5)	8,210 (55.5)
55				6,390 (23.5)	6,580 (39)	6,760 (48)	6,790 (51)
60					5,410 (32)	5,590 (43)	5,660 (46.5)
65					4,450 (22)	4,620 (37)	4,690 (42)
70						3,810 (30.5)	3,900 (36)
75						3,130 (21.5)	3,210 (29.5)
80							2,620 (21)
Min. boom angle (deg.) for indicated length (no load)							0
Max. boom length (ft.) at 0 degree boom angle (no load)							90

NOTE: ( ) Boom angles are in degrees.
*This capacity is based on maximum boom angle.
+9 parts line required to lift this capacity (using auxiliary boom nose).

Boom Angle	37	45	55	65	75	85	90
0°	18,700 (30.8)	12,250 (38.8)	7,860 (48.8)	5,350 (58.8)	3,740 (68.8)	2,680 (78.8)	2,220 (83.8)

NOTE: ( ) Reference radii in feet.

A6-829-016390

SALE & RENTAL

THIS CHART IS ONLY A GUIDE AND SHOULD NOT BE USED TO OPERATE THE CRANE. The individual crane's load chart, operating instructions and other instructional plates must be read and understood prior to operating the crane.

37 - 90 ft.
(11.2 - 27.4 m)

2,000 lbs.
(907 kg)

100%

OVER REAR

Pounds

Feet	37	45	55	65	75	85	90
10	+80,000 (68.5)	64,650 (72.5)	55,500 (76.5)	47,150 (79)			
12	59,150 (65)	58,350 (70)	50,500 (74)	42,550 (77.5)	*39,700 (80)		
15	47,250 (59.5)	47,250 (65.5)	43,450 (71)	37,100 (74.5)	34,600 (77)	*29,000 (80)	*23,500 (80)
20	33,200 (50)	33,200 (58)	33,200 (65)	30,400 (70)	28,400 (73)	26,850 (76)	23,500 (77)
25	24,100 (38)	24,100 (50)	24,100 (59)	24,100 (65)	23,950 (69)	22,650 (72.5)	20,400 (74)
30	18,150 (19.5)	18,300 (40.5)	18,300 (52.5)	18,300 (59.5)	18,300 (65)	18,300 (68.5)	17,500 (70.5)
35		14,050 (27.5)	14,400 (45)	14,650 (54)	14,850 (60.5)	14,900 (65)	14,900 (67)
40			11,250 (36.5)	11,600 (48.5)	11,800 (55.5)	12,000 (61)	12,150 (63)
45			8,990 (25)	9,290 (41.5)	9,590 (50.5)	9,790 (57)	9,910 (59.5)
50				7,530 (34)	7,820 (45)	8,080 (52.5)	8,180 (55.5)
55				6,150 (23.5)	6,420 (39)	6,690 (48)	6,820 (51)
60					5,290 (32)	5,560 (43)	5,670 (46.5)
65					4,370 (22)	4,620 (37)	4,720 (42)
70						3,840 (30.5)	3,930 (36)
75						3,170 (21.5)	3,250 (29.5)
80							2,670 (21)
Min. boom angle (deg.) for indicated length (no load)							0
Max. boom length (ft.) at 0 degree boom angle (no load)							90

NOTE: ( ) Boom angles are in degrees.
+9 parts line required to lift this capacity (using auxiliary boom nose).

Boom Angle	37	45	55	65	75	85	90
0°	17,300 (30.8)	11,550 (38.8)	7,610 (48.8)	5,270 (58.8)	3,760 (68.8)	2,720 (78.8)	2,280 (83.8)

NOTE: ( ) Reference radii in feet.

A6-829-016425

SALE & RENTAL

THIS CHART IS ONLY A GUIDE AND SHOULD NOT BE USED TO OPERATE THE CRANE. The individual crane's load chart, operating instructions and other instructional plates must be read and understood prior to operating the crane.

37 - 90 ft.
(11.2 - 27.4 m)

2,000 lbs.
(907 kg)

100%

360°

Pounds

Feet	37	45	55	65	75	85	90
10	+80,000 (68.5)	62,300 (72.5)	55,500 (76.5)	47,150 (79)			
12	55,400 (65)	55,400 (70)	50,500 (74)	42,550 (77.5)	*39,700 (80)		
15	47,250 (59.5)	47,250 (65.5)	43,450 (71)	37,100 (74.5)	34,600 (77)	*29,000 (80)	*23,500 (80)
20	32,550 (50)	32,550 (58)	32,550 (65)	30,400 (70)	28,400 (73)	26,850 (76)	23,500 (77)
25	23,950 (38)	24,100 (50)	24,100 (59)	24,100 (65)	23,950 (69)	22,650 (72.5)	20,400 (74)
30	16,400 (19.5)	16,950 (40.5)	17,100 (52.5)	17,350 (59.5)	17,650 (65)	17,100 (68.5)	17,300 (70.5)
35		12,400 (27.5)	12,700 (45)	12,850 (54)	13,050 (60.5)	13,250 (65)	13,000 (67)
40			9,650 (36.5)	9,860 (48.5)	10,000 (55.5)	10,150 (61)	10,200 (63)
45			7,450 (25)	7,670 (41.5)	7,810 (50.5)	7,940 (57)	8,110 (59.5)
50				6,040 (34)	6,240 (45)	6,370 (52.5)	6,520 (55.5)
55				4,770 (23.5)	5,000 (39)	5,180 (48)	5,290 (51)
60					3,990 (32)	4,210 (43)	4,310 (46.5)
65					3,160 (22)	3,380 (37)	3,470 (42)
70						2,690 (30.5)	2,770 (36)
75						2,110 (21.5)	2,180 (29.5)
80							1,670 (21)
Min. boom angle (deg.) for indicated length (no load)							0
Max. boom length (ft.) at 0 degree boom angle (no load)							90

NOTE: ( ) Boom angles are in degrees.
+9 parts line required to lift this capacity (using auxiliary boom nose).

Boom Angle	37	45	55	65	75	85	90
0°	15,600 (30.8)	9,990 (38.8)	6,150 (48.8)	3,970 (58.8)	2,620 (68.8)	1,720 (78.8)	1,330 (83.8)

NOTE: ( ) Reference radii in feet.

A6-829-016400

SALE & RENTAL

THIS CHART IS ONLY A GUIDE AND SHOULD NOT BE USED TO OPERATE THE CRANE. The individual crane's load chart, operating instructions and other instructional plates must be read and understood prior to operating the crane.

37 - 90 ft.
(11.2 - 27.4 m)

30 - 54 ft.
(9.1 - 16.4 m)

6,000 lbs.
(2722 kg)

100%

OVER REAR

Pounds

Feet	30 FT LENGTH 0° OFFSET	25° OFFSET	45° OFFSET	54 FT LENGTH 0° OFFSET	25° OFFSET	45° OFFSET
20	*14,000 (80)					
25	14,000 (79)					
30	14,000 (76.5)	*9,280 (80)		*7,500 (80)		
35	13,200 (74)	8,820 (79)	*4,690 (80)	7,500 (78.5)		
40	11,950 (71)	8,380 (76.5)	4,590 (78.5)	7,500 (76.5)		
45	10,550 (68.5)	7,990 (73.5)	4,500 (76)	7,500 (74.5)		
50	9,350 (66)	7,640 (71)	4,420 (73)	7,030 (72)	*4,300 (80)	
55	8,410 (63)	7,330 (68)	4,350 (70)	6,470 (70)	4,090 (77.5)	
60	7,230 (60.5)	7,050 (65.5)	4,280 (67)	5,980 (67.5)	3,890 (75.5)	*2,310 (80)
65	6,220 (57.5)	6,750 (62.5)	4,220 (64)	5,550 (65.5)	3,710 (73)	2,240 (77.5)
70	5,370 (54.5)	5,960 (59)	4,170 (61)	5,170 (63)	3,550 (71)	2,170 (75)
75	4,650 (51)	5,150 (56)	4,130 (57.5)	4,830 (61)	3,400 (68.5)	2,110 (72.5)
80	4,030 (48)	4,450 (52.5)	4,100 (54)	4,530 (58.5)	3,270 (66)	2,060 (69.5)
85	3,490 (44)	3,840 (49)	3,970 (50)	3,970 (56)	3,140 (63.5)	2,010 (67)
90	3,010 (40.5)	3,340 (45)		3,460 (53)	3,030 (60.5)	1,970 (64)
95	2,580 (36)	2,890 (40.5)		3,020 (50.5)	2,930 (58)	1,940 (61)
100	2,200 (31.5)	2,480 (35.5)		2,620 (47.5)	2,800 (55)	1,920 (57.5)
105	1,860 (25.5)			2,260 (44.5)	2,600 (51.5)	1,900 (54)
110	1,550 (17.5)			1,930 (41.5)	2,330 (48.5)	
115				1,660 (37.5)	2,000 (44.5)	
120				1,430 (34)	1,690 (40.5)	
125				1,200 (29.5)	1,420 (35.5)	

No Load Stability Data

Minimum boom angle (deg.) for indicated length	0	25	45	11	25	45
Maximum boom length (ft.) at 0 deg. boom angle		90			85	

NOTE: ( ) Boom angles are in degrees.
*This capacity is based on maximum boom angle.

A6-829-016422

SALE & RENTAL

THIS CHART IS ONLY A GUIDE AND SHOULD NOT BE USED TO OPERATE THE CRANE. The individual crane's load chart, operating instructions and other instructional plates must be read and understood prior to operating the crane.

37 - 90 ft.
(11.2 - 27.4 m)

30 - 54 ft.
(9.1 - 16.4 m)

6,000 lbs.
(2722 kg)

100%

360°

Pounds

Feet	30 FT LENGTH 0° OFFSET	30 FT LENGTH 25° OFFSET	30 FT LENGTH 45° OFFSET	54 FT LENGTH 0° OFFSET	54 FT LENGTH 25° OFFSET	54 FT LENGTH 45° OFFSET
20	*14,000 (80)					
25	14,000 (79)					
30	14,000 (76.5)	*9,280 (80)		*7,500 (80)		
35	13,200 (74)	8,820 (79)	*4,690 (80)	7,500 (78.5)		
40	11,950 (71)	8,380 (76.5)	4,590 (78.5)	7,500 (76.5)		
45	10,550 (68.5)	7,990 (73.5)	4,500 (76)	7,500 (74.5)		
50	8,690 (66)	7,640 (71)	4,420 (73)	7,030 (72)	*4,300 (80)	
55	7,230 (63)	7,330 (68)	4,350 (70)	6,470 (70)	4,090 (77.5)	
60	6,060 (60.5)	6,850 (65.5)	4,280 (67)	5,980 (67.5)	3,890 (75.5)	*2,310 (80)
65	5,100 (57.5)	5,810 (62.5)	4,220 (64)	5,550 (65.5)	3,710 (73)	2,240 (77.5)
70	4,300 (54.5)	4,940 (59)	4,170 (61)	4,880 (63)	3,550 (71)	2,170 (75)
75	3,620 (51)	4,210 (56)	4,130 (57.5)	4,190 (61)	3,400 (68.5)	2,110 (72.5)
80	3,050 (48)	3,580 (52.5)	3,600 (54)	3,610 (58.5)	3,270 (66)	2,060 (69.5)
85	2,560 (44)	3,030 (49)	3,020 (50)	3,100 (56)	3,140 (63.5)	2,010 (67)
90	2,130 (40.5)	2,560 (45)		2,650 (53)	3,030 (60.5)	1,970 (64)
95	1,760 (36)	2,140 (40.5)		2,260 (50.5)	2,750 (58)	1,940 (61)
100	1,420 (31.5)	1,760 (35.5)		1,910 (47.5)	2,180 (55)	1,920 (57.5)
105	1,120 (25.5)			1,590 (44.5)	1,810 (51.5)	1,900 (54)
110				1,310 (41.5)	1,480 (48.5)	
115				1,060 (37.5)	1,180 (44.5)	

No Load Stability Data

	30 FT LENGTH			54 FT LENGTH		
Minimum boom angle (deg.) for indicated length	0	25	45	32	33	45
Maximum boom length (ft.) at 0 deg. boom angle		90			65	

NOTE: ( ) Boom angles are in degrees.
*This capacity is based on maximum boom angle.

A6-829-016391

SALE & RENTAL

THIS CHART IS ONLY A GUIDE AND SHOULD NOT BE USED TO OPERATE THE CRANE. The individual crane's load chart, operating instructions and other instructional plates must be read and understood prior to operating the crane.

37 - 90 ft.
(11.2 - 27.4 m)

30 - 54 ft.
(9.1 - 16.4 m)

2,000 lbs.
(907 kg)

100%

OVER REAR

Pounds

Feet	30 FT LENGTH 0° OFFSET	30 FT LENGTH 25° OFFSET	30 FT LENGTH 45° OFFSET	54 FT LENGTH 0° OFFSET	54 FT LENGTH 25° OFFSET	54 FT LENGTH 45° OFFSET
20	*14,000 (80)					
25	14,000 (79)					
30	14,000 (76.5)	*9,280 (80)		*7,500 (80)		
35	13,200 (74)	8,820 (79)	*4,690 (80)	7,500 (78.5)		
40	11,950 (71)	8,380 (76.5)	4,590 (78.5)	7,500 (76.5)		
45	10,300 (68.5)	7,990 (73.5)	4,500 (76)	7,500 (74.5)		
50	8,560 (66)	7,640 (71)	4,420 (73)	7,030 (72)	*4,300 (80)	
55	7,200 (63)	7,330 (68)	4,350 (70)	6,470 (70)	4,090 (77.5)	
60	6,090 (60.5)	6,880 (65.5)	4,280 (67)	5,980 (67.5)	3,890 (75.5)	*2,310 (80)
65	5,180 (57.5)	5,900 (62.5)	4,220 (64)	5,550 (65.5)	3,710 (73)	2,240 (77.5)
70	4,410 (54.5)	5,030 (59)	4,170 (61)	5,010 (63)	3,550 (71)	2,170 (75)
75	3,760 (51)	4,290 (56)	4,130 (57.5)	4,320 (61)	3,400 (68.5)	2,110 (72.5)
80	3,200 (48)	3,650 (52.5)	3,800 (54)	3,720 (58.5)	3,270 (66)	2,060 (69.5)
85	2,720 (44)	3,090 (49)	3,230 (50)	3,200 (56)	3,140 (63.5)	2,010 (67)
90	2,280 (40.5)	2,610 (45)		2,740 (53)	3,030 (60.5)	1,970 (64)
95	1,900 (36)	2,200 (40.5)		2,330 (50.5)	2,870 (58)	1,940 (61)
100	1,550 (31.5)	1,840 (35.5)		1,970 (47.5)	2,460 (55)	1,920 (57.5)
105	1,250 (25.5)			1,650 (44.5)	2,080 (51.5)	1,900 (54)
110				1,350 (41.5)	1,750 (48.5)	
115				1,120 (37.5)	1,440 (44.5)	
120					1,160 (40.5)	

No Load Stability Data

Minimum boom angle (deg.) for indicated length	3	25	45	30	31	45
Maximum boom length (ft.) at 0 deg. boom angle		85			75	

NOTE: ( ) Boom angles are in degrees.
*This capacity is based on maximum boom angle.

A6-829-016426

THIS CHART IS ONLY A GUIDE AND SHOULD NOT BE USED TO OPERATE THE CRANE. The individual crane's load chart, operating instructions and other instructional plates must be read and understood prior to operating the crane.

37 - 90 ft.
(11.2 - 27.4 m)

30 - 54 ft.
(9.1 - 16.4 m)

2,000 lbs.
(907 kg)

100%

360°

Pounds

Feet	30 FT LENGTH 0° OFFSET	30 FT LENGTH 25° OFFSET	30 FT LENGTH 45° OFFSET	54 FT LENGTH 0° OFFSET	54 FT LENGTH 25° OFFSET	54 FT LENGTH 45° OFFSET
20	*14,000 (80)					
25	14,000 (79)					
30	14,000 (76.5)	*9,280 (80)		*7,500 (80)		
35	13,200 (74)	8,820 (79)	*4,690 (80)	7,500 (78.5)		
40	10,850 (71)	8,380 (76.5)	4,590 (78.5)	7,500 (76.5)		
45	8,680 (68.5)	7,990 (73.5)	4,500 (76)	7,500 (74.5)		
50	7,030 (66)	7,640 (71)	4,420 (73)	7,030 (72)	*4,300 (80)	
55	5,750 (63)	6,650 (68)	4,350 (70)	6,380 (70)	4,090 (77.5)	
60	4,730 (60.5)	5,530 (65.5)	4,280 (67)	5,340 (67.5)	3,890 (75.5)	*2,310 (80)
65	3,910 (57.5)	4,610 (62.5)	4,220 (64)	4,490 (65.5)	3,710 (73)	2,240 (77.5)
70	3,220 (54.5)	3,840 (59)	3,940 (61)	3,820 (63)	3,550 (71)	2,170 (75)
75	2,640 (51)	3,190 (56)	3,250 (57.5)	3,270 (61)	3,400 (68.5)	2,110 (72.5)
80	2,140 (48)	2,630 (52.5)	2,650 (54)	2,720 (58.5)	3,270 (66)	2,060 (69.5)
85	1,710 (44)	2,150 (49)	2,140 (50)	2,240 (56)	2,970 (63.5)	2,010 (67)
90	1,330 (40.5)	1,730 (45)		1,820 (53)	2,490 (60.5)	1,970 (64)
95		1,360 (40.5)		1,480 (50.5)	2,070 (58)	1,940 (61)
100		1,030 (35.5)		1,170 (47.5)	1,700 (55)	1,920 (57.5)
105					1,360 (51.5)	1,540 (54)
110					1,060 (48.5)	

No Load Stability Data

Minimum boom angle (deg.) for indicated length	30	31	45	42	44	46
Maximum boom length (ft.) at 0 deg. boom angle		75			55	

NOTE: ( ) Boom angles are in degrees.
*This capacity is based on maximum boom angle.

A6-829-016401

SALE & RENTAL

THIS CHART IS ONLY A GUIDE AND SHOULD NOT BE USED TO OPERATE THE CRANE. The individual crane's load chart, operating instructions and other instructional plates must be read and understood prior to operating the crane.

Working range

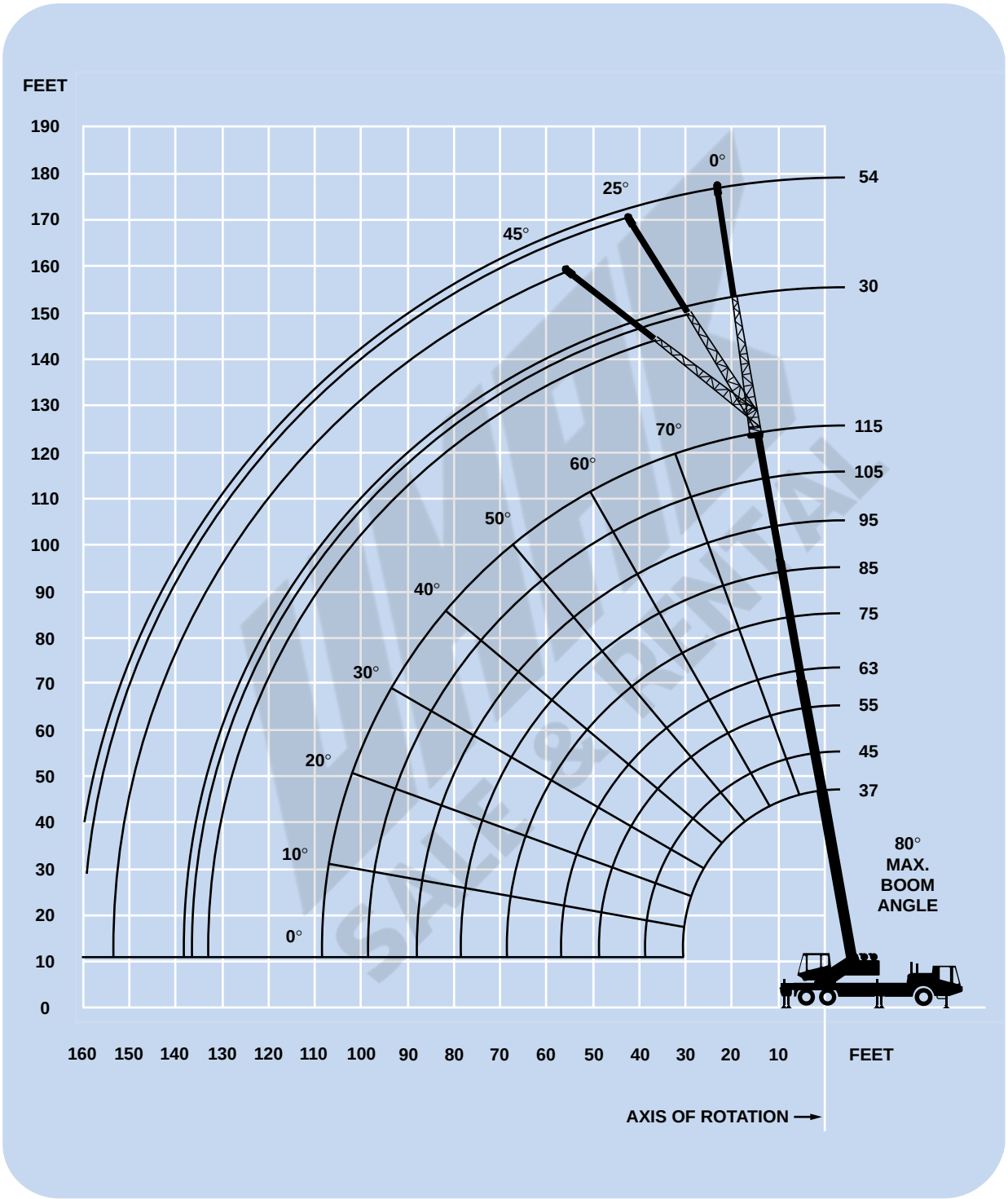

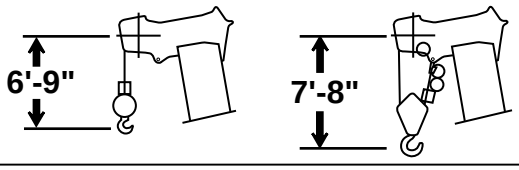

DIMENSIONS ARE FOR LARGEST GROVE FURNISHED HOOK BLOCK AND HEADACHE BALL, WITH ANTI-TWO BLOCK ACTIVATED.

37 - 115 ft.
(11.2 - 35 m)

6,000 lbs.
(2722 kg)

100%

OVER REAR

Pounds

Feet	37	45	55	**63	75	85	95	105	115
10	+80,000 (68.5)	71,500 (72.5)	58,200 (76.5)	49,050 (78.5)					
12	62,000 (65)	59,900 (70)	51,550 (74)	46,200 (76.5)	*33,750 (80)				
15	50,000 (59.5)	50,000 (65.5)	43,800 (71)	39,050 (73.5)	33,750 (77)	*31,750 (80)			
20	37,500 (50)	37,500 (58)	34,250 (65)	30,500 (68.5)	28,400 (73)	26,150 (76)	23,600 (78)	*21,800 (80)	
25	28,000 (38)	28,000 (50)	26,200 (59)	24,600 (63.5)	23,400 (69)	22,050 (72.5)	19,950 (75)	18,450 (77)	*15,050 (80)
30	20,500 (19.5)	20,350 (40.5)	20,150 (52.5)	19,800 (58)	19,250 (65)	18,500 (68.5)	17,100 (71.5)	15,850 (74.5)	15,050 (76.5)
35		15,050 (27.5)	14,950 (45)	14,800 (52.5)	15,700 (60.5)	15,700 (65)	14,900 (68.5)	13,800 (71.5)	13,150 (74)
40			11,200 (36.5)	11,100 (46)	12,050 (55.5)	12,600 (61)	13,050 (65)	12,150 (68.5)	11,600 (71.5)
45			8,720 (25)	8,700 (39)	9,650 (50.5)	10,200 (57)	10,650 (61.5)	10,800 (65.5)	10,350 (68.5)
50				6,710 (30)	7,610 (45)	8,310 (52.5)	8,700 (58)	9,070 (62)	9,280 (65.5)
55				5,150 (17.5)	6,000 (39)	6,700 (48)	7,090 (54)	7,440 (59)	7,810 (63)
60					4,690 (32)	5,360 (43)	5,760 (50)	6,130 (55.5)	6,480 (60)
65					3,620 (22)	4,260 (37)	4,650 (45.5)	5,040 (52)	5,390 (56.5)
70						3,330 (30.5)	3,710 (41)	4,090 (48)	4,470 (53.5)
75						2,540 (21.5)	2,910 (35.5)	3,290 (44)	3,660 (50)
80							2,230 (29)	2,600 (39.5)	2,960 (46.5)
85							1,630 (20.5)	1,990 (34)	2,360 (42.5)
90								1,470 (28)	1,820 (38)
95								1,000 (20)	1,350 (33.5)
Min. boom angle (deg.) for indicated length (no load)									15
Max. boom length (ft.) at 0 degree boom angle (no load)									105

NOTE: ( ) Boom angles are in degrees.
*This capacity is based on maximum boom angle.
**63 ft. boom length is with inner mid fully extended and outer mid & fly retracted.
+9 parts line required to lift this capacity (using auxiliary boom nose).

Boom Angle	37	45	55	**63	75	85	95
0°	19,250 (30.8)	12,000 (38.8)	7,140 (48.8)	4,660 (56.8)	2,910 (68.8)	2,010 (78.8)	1,230 (88.8)

NOTE: ( ) Reference radii in feet.

A6-829-100097

SALE & RENTAL

THIS CHART IS ONLY A GUIDE AND SHOULD NOT BE USED TO OPERATE THE CRANE. The individual crane's load chart, operating instructions and other instructional plates must be read and understood prior to operating the crane.

37 - 115 ft.
(11.2 - 35 m)

6,000 lbs.
(2722 kg)

100%

360°

Pounds

Feet	37	45	55	**63	75	85	95	105	115
10	+80,000 (68.5)	71,500 (72.5)	58,200 (76.5)	49,050 (78.5)					
12	62,000 (65)	59,900 (70)	51,550 (74)	46,200 (76.5)	*33,750 (80)				
15	50,000 (59.5)	50,000 (65.5)	43,800 (71)	39,050 (73.5)	33,750 (77)	*31,750 (80)			
20	37,500 (50)	37,500 (58)	34,250 (65)	30,500 (68.5)	28,400 (73)	26,150 (76)	23,600 (78)	*21,800 (80)	
25	28,000 (38)	28,000 (50)	26,200 (59)	24,600 (63.5)	23,400 (69)	22,050 (72.5)	19,950 (75)	18,450 (77)	*15,050 (80)
30	19,800 (19.5)	19,450 (40.5)	18,750 (52.5)	18,200 (58)	18,950 (65)	18,500 (68.5)	17,100 (71.5)	15,850 (74.5)	15,050 (76.5)
35		14,150 (27.5)	13,650 (45)	13,150 (52.5)	13,900 (60.5)	14,550 (65)	14,900 (68.5)	13,800 (71.5)	13,150 (74)
40			10,200 (36.5)	9,800 (46)	10,500 (55.5)	11,150 (61)	11,650 (65)	12,150 (68.5)	11,600 (71.5)
45			7,680 (25)	7,350 (39)	8,110 (50.5)	8,730 (57)	9,170 (61.5)	9,630 (65.5)	10,050 (68.5)
50				5,460 (30)	6,300 (45)	6,920 (52.5)	7,310 (58)	7,720 (62)	8,140 (65.5)
55				3,990 (17.5)	4,840 (39)	5,500 (48)	5,860 (54)	6,240 (59)	6,620 (63)
60					3,660 (32)	4,360 (43)	4,710 (50)	5,050 (55.5)	5,410 (60)
65					2,690 (22)	3,390 (37)	3,760 (45.5)	4,080 (52)	4,410 (56.5)
70						2,580 (30.5)	2,940 (41)	3,270 (48)	3,590 (53.5)
75						1,890 (21.5)	2,240 (35.5)	2,580 (44)	2,890 (50)
80							1,630 (29)	1,960 (39.5)	2,290 (46.5)
85							1,110 (20.5)	1,430 (34)	1,740 (42.5)
90									1,270 (38)
Min. boom angle (deg.) for indicated length (no load)							5	23	30
Max. boom length (ft.) at 0 degree boom angle (no load)								85	

NOTE: ( ) Boom angles are in degrees.
*This capacity is based on maximum boom angle.
**63 ft. boom length is with inner mid fully extended and outer mid & fly retracted.
+9 parts line required to lift this capacity (using auxiliary boom nose).

Boom Angle	37	45	55	**63	75	85
0°	18,750 (30.8)	11,300 (38.8)	6,190 (48.8)	3,530 (56.8)	2,060 (68.8)	1,430 (78.8)

NOTE: ( ) Reference radii in feet.

A6-829-100096

SALE & RENTAL

THIS CHART IS ONLY A GUIDE AND SHOULD NOT BE USED TO OPERATE THE CRANE. The individual crane's load chart, operating instructions and other instructional plates must be read and understood prior to operating the crane.

37 - 115 ft.
(11.2 - 35 m)

2,000 lbs.
(907 kg)

100%

OVER REAR

Pounds

Feet	37	45	55	**63	75	85	95	105	115
10	+80,000 (68.5)	69,000 (72.5)	58,200 (76.5)	49,050 (78.5)					
12	57,750 (65)	57,550 (70)	51,550 (74)	46,200 (76.5)	*33,750 (80)				
15	45,750 (59.5)	45,550 (65.5)	43,800 (71)	39,050 (73.5)	33,750 (77)	*31,750 (80)			
20	32,300 (50)	32,100 (58)	31,900 (65)	30,500 (68.5)	28,400 (73)	26,150 (76)	23,600 (78)	*21,800 (80)	
25	23,000 (38)	22,800 (50)	22,600 (59)	22,500 (63.5)	23,400 (69)	22,050 (72.5)	19,950 (75)	18,450 (77)	*15,050 (80)
30	17,150 (19.5)	16,950 (40.5)	16,750 (52.5)	16,650 (58)	17,650 (65)	18,250 (68.5)	17,100 (71.5)	15,850 (74.5)	15,050 (76.5)
35		12,850 (27.5)	12,750 (45)	12,600 (52.5)	13,600 (60.5)	14,200 (65)	14,650 (68.5)	13,800 (71.5)	13,150 (74)
40			9,510 (36.5)	9,460 (46)	10,400 (55.5)	11,200 (61)	11,600 (65)	12,000 (68.5)	11,600 (71.5)
45			7,130 (25)	7,100 (39)	8,070 (50.5)	8,780 (57)	9,160 (61.5)	9,550 (65.5)	9,940 (68.5)
50				5,310 (30)	6,210 (45)	6,940 (52.5)	7,300 (58)	7,670 (62)	8,050 (65.5)
55				3,890 (17.5)	4,740 (39)	5,440 (48)	5,830 (54)	6,190 (59)	6,550 (63)
60					3,560 (32)	4,220 (43)	4,630 (50)	4,990 (55.5)	5,340 (60)
65					2,580 (22)	3,220 (37)	3,610 (45.5)	4,000 (52)	4,350 (56.5)
70						2,380 (30.5)	2,760 (41)	3,140 (48)	3,510 (53.5)
75						1,660 (21.5)	2,030 (35.5)	2,410 (44)	2,780 (50)
80							1,410 (29)	1,780 (39.5)	2,140 (46.5)
85								1,230 (34)	1,590 (42.5)
90									1,100 (38)
Min. boom angle (deg.) for indicated length (no load)							3	21	29
Max. boom length (ft.) at 0 degree boom angle (no load)								85	

NOTE: ( ) Boom angles are in degrees.
*This capacity is based on maximum boom angle.
**63 ft. boom length is with inner mid fully extended and outer mid & fly retracted.
+9 parts line required to lift this capacity (using auxiliary boom nose).

Boom Angle	37	45	55	**63	75	85
0°	16,350 (30.8)	10,250 (38.8)	5,700 (48.8)	3,450 (56.8)	1,940 (68.8)	1,180 (78.8)

NOTE: ( ) Reference radii in feet.

A6-829-100101

SALE & RENTAL

THIS CHART IS ONLY A GUIDE AND SHOULD NOT BE USED TO OPERATE THE CRANE. The individual crane's load chart, operating instructions and other instructional plates must be read and understood prior to operating the crane.

37 - 115 ft.
(11.2 - 35 m)

2,000 lbs.
(907 kg)

100%

360°

Pounds

Feet	37	45	55	**63	75	85	95	105	115
10	+80,000 (68.5)	60,100 (72.5)	58,200 (76.5)	49,050 (78.5)					
12	53,400 (65)	53,200 (70)	51,550 (74)	46,200 (76.5)	*33,750 (80)				
15	45,350 (59.5)	45,150 (65.5)	43,800 (71)	39,050 (73.5)	33,750 (77)	*31,750 (80)			
20	31,600 (50)	31,350 (58)	31,150 (65)	30,050 (68.5)	28,400 (73)	26,150 (76)	23,600 (78)	*21,800 (80)	
25	23,000 (38)	22,800 (50)	22,600 (59)	22,200 (63.5)	23,000 (69)	22,050 (72.5)	19,950 (75)	18,450 (77)	*15,050 (80)
30	16,500 (19.5)	16,150 (40.5)	15,450 (52.5)	14,900 (58)	15,650 (65)	16,300 (68.5)	17,050 (71.5)	15,850 (74.5)	15,050 (76.5)
35		11,500 (27.5)	11,000 (45)	10,500 (52.5)	11,250 (60.5)	11,900 (65)	12,500 (68.5)	13,050 (71.5)	13,150 (74)
40			8,000 (36.5)	7,600 (46)	8,320 (55.5)	8,960 (61)	9,460 (65)	9,970 (68.5)	10,500 (71.5)
45			5,800 (25)	5,460 (39)	6,220 (50.5)	6,850 (57)	7,290 (61.5)	7,740 (65.5)	8,210 (68.5)
50				3,810 (30)	4,650 (45)	5,270 (52.5)	5,660 (58)	6,070 (62)	6,490 (65.5)
55				2,530 (17.5)	3,380 (39)	4,040 (48)	4,400 (54)	4,770 (59)	5,160 (63)
60					2,340 (32)	3,040 (43)	3,390 (50)	3,730 (55.5)	4,090 (60)
65					1,500 (22)	2,190 (37)	2,560 (45.5)	2,880 (52)	3,220 (56.5)
70						1,480 (30.5)	1,840 (41)	2,170 (48)	2,490 (53.5)
75							1,220 (35.5)	1,570 (44)	1,870 (50)
75								1,020 (39.5)	1,340 (46.5)
Min. boom angle (deg.) for indicated length (no load)						18	28	35	40
Max. boom length (ft.) at 0 degree boom angle (no load)							75		

NOTE: ( ) Boom angles are in degrees.
*This capacity is based on maximum boom angle.
**63 ft. boom length is with inner mid fully extended and outer mid & fly retracted.
+9 parts line required to lift this capacity (using auxiliary boom nose).

Boom Angle	37	45	55	**63
0°	15,600 (30.8)	9,060 (38.8)	4,490 (48.8)	2,130 (56.8)

NOTE: ( ) Reference radii in feet.

A6-829-100100

SALE & RENTAL

THIS CHART IS ONLY A GUIDE AND SHOULD NOT BE USED TO OPERATE THE CRANE. The individual crane's load chart, operating instructions and other instructional plates must be read and understood prior to operating the crane.

37 - 115 ft.
(11.2 - 35 m)

30 - 54 ft.
(9.1 - 16.4 m)

6,000 lbs.
(2722 kg)

100%

OVER REAR

Pounds

Feet	30 FT LENGTH 0° OFFSET	30 FT LENGTH 25° OFFSET	30 FT LENGTH 45° OFFSET	54 FT LENGTH 0° OFFSET	54 FT LENGTH 25° OFFSET	54 FT LENGTH 45° OFFSET
30	*8,510 (80)					
35	8,510 (78)					
40	8,510 (76)	*8,000 (80)		*5,010 (80)		
45	7,450 (73.5)	7,900 (78)	*4,500 (80)	5,010 (78.5)		
50	6,560 (71.5)	7,340 (75.5)	4,410 (78)	5,010 (77)		
55	5,800 (69.5)	6,500 (73.5)	4,340 (76)	5,010 (75)		
60	5,140 (67.5)	5,770 (71)	4,270 (73.5)	5,010 (73)	*3,840 (80)	
65	4,560 (65)	5,130 (69)	4,220 (71)	4,470 (71.5)	3,640 (78)	
70	4,060 (62.5)	4,570 (66.5)	4,170 (69)	3,990 (69.5)	3,490 (76)	*2,200 (80)
75	3,610 (60.5)	4,070 (64.5)	4,130 (66.5)	3,570 (67.5)	3,340 (74)	2,100 (77.5)
80	3,210 (58)	3,620 (62)	4,100 (64)	3,180 (65.5)	3,220 (72)	2,050 (75)
85	2,860 (55.5)	3,210 (59.5)	3,730 (61)	2,840 (63.5)	3,100 (70)	2,000 (73)
90	2,360 (53)	2,840 (56.5)	3,080 (58.5)	2,530 (61.5)	3,000 (68)	1,970 (71)
95	1,900 (50)	2,330 (54)	2,510 (55.5)	2,250 (59.5)	2,800 (66)	1,940 (68.5)
100	1,500 (47.5)	1,870 (51)		1,990 (57.5)	2,490 (63.5)	1,920 (66.5)
105	1,130 (44.5)	1,450 (48)		1,590 (55)	2,200 (61.5)	1,910 (64)
110		1,080 (45)		1,210 (53)	1,930 (59)	1,900 (61.5)
115					1,550 (56.5)	1,810 (58.5)
120					1,200 (54)	
No Load Stability Data						
Minimum boom angle (deg.) for indicated length	40	41	45	48	49	49
Maximum boom length (ft.) at 0 deg. boom angle		75			63	

NOTE: ( ) Boom angles are in degrees.
*This capacity is based on maximum boom angle.

A6-829-100113

SALE & RENTAL

THIS CHART IS ONLY A GUIDE AND SHOULD NOT BE USED TO OPERATE THE CRANE. The individual crane's load chart, operating instructions and other instructional plates must be read and understood prior to operating the crane.

37 - 115 ft.
(11.2 - 35 m)

30 - 54 ft.
(9.1 - 16.4 m)

6,000 lbs.
(2722 kg)

100%

360°

Pounds

Feet	30 FT LENGTH 0° OFFSET	30 FT LENGTH 25° OFFSET	30 FT LENGTH 45° OFFSET	54 FT LENGTH 0° OFFSET	54 FT LENGTH 25° OFFSET	54 FT LENGTH 45° OFFSET
30	*8,510 (80)					
35	8,510 (78)					
40	8,510 (76)	*8,000 (80)		*5,010 (80)		
45	7,450 (73.5)	7,900 (78)	*4,500 (80)	5,010 (78.5)		
50	6,560 (71.5)	7,340 (75.5)	4,410 (78)	5,010 (77)		
55	5,800 (69.5)	6,500 (73.5)	4,340 (76)	5,010 (75)		
60	5,140 (67.5)	5,770 (71)	4,270 (73.5)	5,010 (73)	*3,840 (80)	
65	4,560 (65)	5,130 (69)	4,220 (71)	4,470 (71.5)	3,640 (78)	
70	4,020 (62.5)	4,570 (66.5)	4,170 (69)	3,990 (69.5)	3,490 (76)	*2,200 (80)
75	3,280 (60.5)	3,930 (64.5)	4,130 (66.5)	3,570 (67.5)	3,340 (74)	2,100 (77.5)
80	2,650 (58)	3,130 (62)	3,490 (64)	3,060 (65.5)	3,220 (72)	2,050 (75)
85	2,100 (55.5)	2,570 (59.5)	2,870 (61)	2,530 (63.5)	3,100 (70)	2,000 (73)
90	1,620 (53)	2,070 (56.5)	2,290 (58.5)	2,080 (61.5)	2,920 (68)	1,970 (71)
95	1,190 (50)	1,630 (54)	1,770 (55.5)	1,670 (59.5)	2,440 (66)	1,940 (68.5)
100		1,210 (51)		1,310 (57.5)	2,020 (63.5)	1,920 (66.5)
105					1,640 (61.5)	1,910 (64)
110					1,290 (59)	1,570 (61.5)

No Load Stability Data

Minimum boom angle (deg.) for indicated length	47	48	48	54	55	55
Maximum boom length (ft.) at 0 deg. boom angle		63			55	

NOTE: ( ) Boom angles are in degrees.
*This capacity is based on maximum boom angle.

A6-829-100112

SALE & RENTAL

THIS CHART IS ONLY A GUIDE AND SHOULD NOT BE USED TO OPERATE THE CRANE. The individual crane's load chart, operating instructions and other instructional plates must be read and understood prior to operating the crane.

37 - 115 ft.
(11.2 - 35 m)

30 - 54 ft.
(9.1 - 16.4 m)

2,000 lbs.
(907 kg)

100%

OVER REAR

Pounds

Feet	30 FT LENGTH 0° OFFSET	30 FT LENGTH 25° OFFSET	30 FT LENGTH 45° OFFSET	54 FT LENGTH 0° OFFSET	54 FT LENGTH 25° OFFSET	54 FT LENGTH 45° OFFSET
30	*8,510 (80)					
35	8,510 (78)					
40	8,510 (76)	*8,000 (80)		*5,010 (80)		
45	7,450 (73.5)	7,900 (78)	*4,500 (80)	5,010 (78.5)		
50	6,560 (71.5)	7,340 (75.5)	4,410 (78)	5,010 (77)		
55	5,800 (69.5)	6,500 (73.5)	4,340 (76)	5,010 (75)		
60	5,140 (67.5)	5,770 (71)	4,270 (73.5)	5,010 (73)	*3,840 (80)	
65	4,560 (65)	5,130 (69)	4,220 (71)	4,470 (71.5)	3,640 (78)	
70	3,960 (62.5)	4,570 (66.5)	4,170 (69)	3,990 (69.5)	3,490 (76)	*2,200 (80)
75	3,250 (60.5)	3,980 (64.5)	4,130 (66.5)	3,570 (67.5)	3,340 (74)	2,100 (77.5)
80	2,640 (58)	3,280 (62)	3,640 (64)	3,180 (65.5)	3,220 (72)	2,050 (75)
85	2,110 (55.5)	2,660 (59.5)	2,960 (61)	2,820 (63.5)	3,100 (70)	2,000 (73)
90	1,640 (53)	2,130 (56.5)	2,360 (58.5)	2,280 (61.5)	3,000 (68)	1,970 (71)
95	1,220 (50)	1,650 (54)	1,830 (55.5)	1,790 (59.5)	2,660 (66)	1,940 (68.5)
100		1,230 (51)		1,360 (57.5)	2,180 (63.5)	1,920 (66.5)
105					1,740 (61.5)	1,910 (64)
110					1,350 (59)	1,680 (61.5)
115					1,000 (56.5)	1,260 (58.5)
No Load Stability Data						
Minimum boom angle (deg.) for indicated length	46	47	47	52	53	54
Maximum boom length (ft.) at 0 deg. boom angle		63			55	

NOTE: ( ) Boom angles are in degrees.
*This capacity is based on maximum boom angle.

A6-829-100117

SALE & RENTAL

THIS CHART IS ONLY A GUIDE AND SHOULD NOT BE USED TO OPERATE THE CRANE. The individual crane's load chart, operating instructions and other instructional plates must be read and understood prior to operating the crane.

37 - 115 ft.
(11.2 - 35 m)

30 - 54 ft.
(9.1 - 16.4 m)

2,000 lbs.
(907 kg)

100%

360°

Pounds

Feet	30 FT LENGTH 0° OFFSET	30 FT LENGTH 25° OFFSET	30 FT LENGTH 45° OFFSET	54 FT LENGTH 0° OFFSET	54 FT LENGTH 25° OFFSET	54 FT LENGTH 45° OFFSET
30	*8,510 (80)					
35	8,510 (78)					
40	8,510 (76)	*8,000 (80)		*5,010 (80)		
45	7,450 (73.5)	7,900 (78)	*4,500 (80)	5,010 (78.5)		
50	6,560 (71.5)	7,340 (75.5)	4,410 (78)	5,010 (77)		
55	5,760 (69.5)	6,500 (73.5)	4,340 (76)	5,010 (75)		
60	4,620 (67.5)	5,540 (71)	4,270 (73.5)	5,010 (73)	*3,840 (80)	
65	3,690 (65)	4,500 (69)	4,220 (71)	4,470 (71.5)	3,640 (78)	
70	2,920 (62.5)	3,640 (66.5)	4,110 (69)	3,670 (69.5)	3,490 (76)	*2,200 (80)
75	2,270 (60.5)	2,910 (64.5)	3,300 (66.5)	2,960 (67.5)	3,340 (74)	2,100 (77.5)
80	1,700 (58)	2,290 (62)	2,600 (64)	2,350 (65.5)	3,220 (72)	2,050 (75)
85	1,220 (55.5)	1,740 (59.5)	1,990 (61)	1,820 (63.5)	2,830 (70)	2,000 (73)
90		1,270 (56.5)	1,460 (58.5)	1,350 (61.5)	2,280 (68)	1,970 (71)
95			1,000 (55.5)		1,800 (66)	1,940 (68.5)
100					1,380 (63.5)	1,760 (66.5)
105					1,000 (61.5)	1,310 (64)

No Load Stability Data

Minimum boom angle (deg.) for indicated length	52	53	54	58	60	60
Maximum boom length (ft.) at 0 deg. boom angle		55			55	

NOTE: ( ) Boom angles are in degrees.
*This capacity is based on maximum boom angle.

A6-829-100116

SALE & RENTAL

THIS CHART IS ONLY A GUIDE AND SHOULD NOT BE USED TO OPERATE THE CRANE. The individual crane's load chart, operating instructions and other instructional plates must be read and understood prior to operating the crane.

NOTES:

SALE & RENTAL