SPECIFICATIONS

HITACHI

CX1800

HYDRAULIC CRAWLER CRANE

Max. Lifting Capacity: 180 000 kg

■ Dimensions

Unit: mm

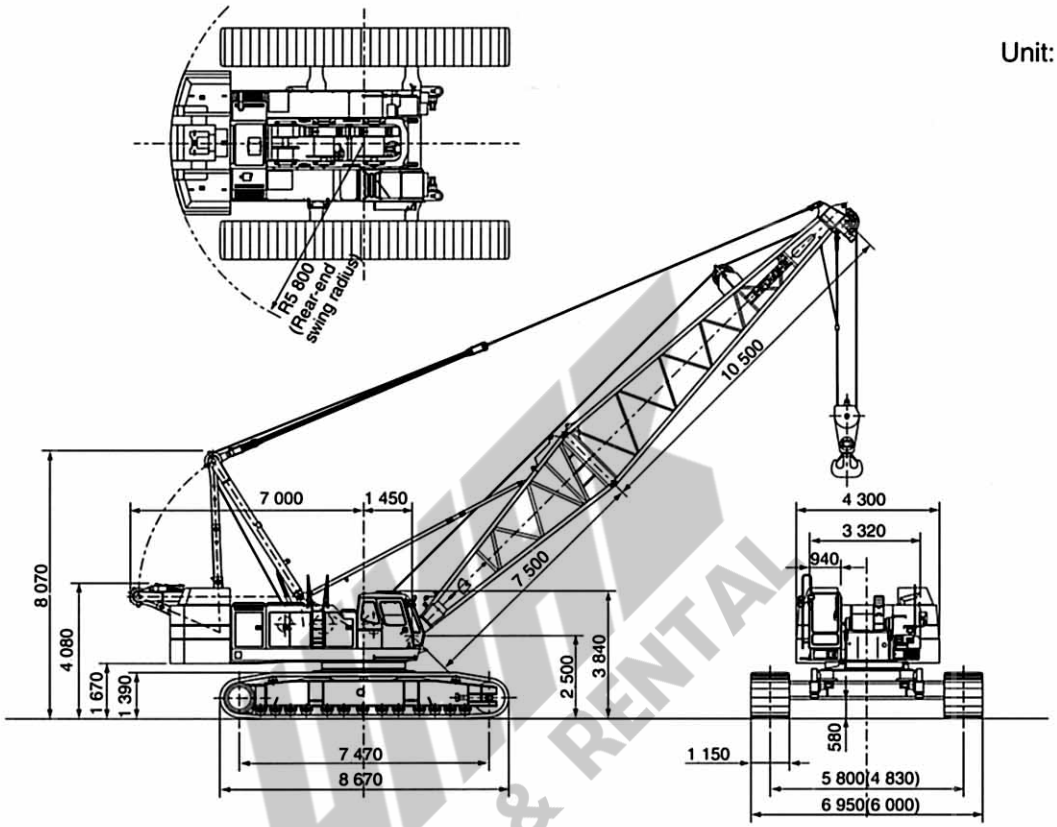

Dimensions shown in parentheses are with tracks retracted.

■ Specifications

Maximum rated load	ton x m	180 x 5.0
Basic boom length	m	18
Max. boom length	m	87
Jib length	m	13 ~ 37
Max. boom with jib length	m	72 +37
Main hoist drum	m/min	110/62/31*
Aux. hoist drum	m/min	110/62/31*
Boom hoist drum	m/min	27 x 2 (2 Drums)*
Swing speed	min^{-1} (rpm)	1.9/1.1 (1.9/1.1)
Travel speed	km/h	1.2/0.8*
Gradeability	% (°)	30 (16)
Engine model		ISUZU A-6RB1T
Rated power	kW/min^{-1} (PS/rpm)	221/2 000 (300/2 000)
Ground pressure	kPa (kgf/cm^2)	89.2 (0.91)
Operating weight	ton	168 (Equipped with 18 m boom and 180 ton capacity hook)

NOTE: Data expressed above are in SI units (International system of Unit), followed by data in conventional units in parentheses.
* Data in the crane mode will vary with the load.

SALE & RENTAL

■ Crane Ratings (Main boom in 360° working area, without mast)

78% Tipping Load (JIS Rating)

Unit: metric ton

Working radius (m)	Boom length (m)															
	18	21	24	27	30	33	36	39	42	45	48	51	54	57	60	63
5.0	180.0															
5.5	166.0	5.6x162.5														
6.0	155.0	154.4	6.1×52.6													
6.5	146.0	145.7	145.5	6.6x144.7												
7.0	140.0	139.6	139.4	139.2	7.1x125.0	7.6x112.5										
8.0	115.0	114.6	114.4	114.2	114.1	112.5	8.2x100.0	8.7x97.3								
9.0	99.5	99.0	98.8	98.7	98.5	98.4	98.2	96.4	9.2x87.5	9.7x81.3						
10.0	85.3	84.8	84.6	84.4	84.2	84.1	83.9	83.8	83.6	80.5	10.2x74.0	10.8x67.9	11.3x62.1	11.8x56.9		
12.0	66.1	65.6	65.3	65.2	64.9	64.8	64.6	64.5	64.3	64.2	64.0	63.8	61.0	56.6	12.3x52.3	12.9x47.5
14.0	53.8	53.2	53.0	52.8	52.5	52.4	52.1	52.1	51.8	51.7	51.6	51.4	51.3	51.0	50.3	46.3
16.0	44.7	44.7	44.4	44.2	43.9	43.7	43.5	43.4	43.2	43.1	42.9	42.7	42.6	42.3	42.1	42.0
18.0	17.2x39.5	38.4	38.1	37.8	37.5	37.4	37.1	37.0	36.8	36.7	36.5	36.3	36.2	35.9	35.7	35.5
20.0		19.8x33.3	33.3	33.0	32.7	32.5	32.2	32.1	31.9	31.8	31.6	31.3	31.3	31.0	30.7	30.6
22.0			29.5	29.2	28.8	28.7	28.4	28.2	28.0	27.9	27.7	27.5	27.4	27.1	26.8	26.7
24.0			22.4x28.7	26.1	25.7	25.5	25.2	25.1	24.9	24.8	24.5	24.3	24.2	23.9	23.7	23.5
26.0				25.0x24.8	23.2	23.0	22.7	22.5	22.3	22.2	21.9	21.7	21.6	21.3	21.1	20.9
28.0					27.6x21.5	20.9	20.5	20.4	20.1	20.0	19.8	19.5	19.4	19.1	18.9	18.7
30.0						19.1	18.7	18.5	18.3	18.1	17.9	17.7	17.6	17.2	17.0	16.8
32.0						30.2x18.9	17.2	17.0	16.7	16.6	16.3	16.1	15.9	15.6	15.4	15.2
34.0							32.8x16.6	15.6	15.3	15.2	14.9	14.7	14.6	14.2	14.0	13.8
36.0								35.4x14.8	14.2	14.0	13.7	13.5	13.3	13.0	12.8	12.6
38.0									13.1	12.9	12.6	12.4	12.2	11.9	11.7	11.5
40.0										12.0	11.7	11.4	11.3	11.0	10.7	10.5
42.0										40.6x11.7	10.9	10.6	10.4	10.1	9.8	9.6
44.0											43.2x10.4	9.8	9.7	9.3	9.1	8.8
46.0												45.8x9.2	9.0	8.6	8.3	8.0
48.0													8.4	7.9	7.6	7.3
50.0													48.4x8.2	7.3	7.0	6.7
52.0														51.0x7.0	6.4	6.[illegible]
54.0															53.6x6.0	5.5
56.0																5.0
56.2																5.0

■ Crane Ratings (Main boom in 360° working area, with mast)

78% Tipping Load (JIS Rating)

Unit: metric ton

Working radius (m)	Boom length (m)														
	45	48	51	54	57	60	63	66	69	72	75	78	81	84	87
9.7	87.5														
10.0	85.5	10.2x75.0	10.8x74.3	11.3x62.5	11.8x62.3										
12.0	65.7	65.6	65.4	62.5	62.1	12.3x57.3	12.9x50.0	13.4x48.2	13.9x44.1						
14.0	52.9	52.8	52.6	52.5	52.4	52.2	50.0	47.8	44.0	14.4x39.8	14.9x35.4	15.5x32.1			
16.0	44.0	43.9	43.7	43.5	43.4	43.2	43.0	43.0	42.8	38.8	34.9	31.8	29.0	16.5x26.3	17.0x23.4
18.0	37.5	37.3	37.1	37.0	36.8	36.6	36.4	36.4	36.3	36.2	33.9	30.9	28.1	25.7	23.0
20.0	32.5	32.3	32.1	31.9	31.8	31.6	31.3	31.3	31.2	31.1	31.1	29.9	27.2	24.8	22.1
22.0	28.5	28.3	28.1	27.9	27.8	27.6	27.3	27.3	27.2	27.1	27.1	26.9	26.3	24.0	21.3
24.0	25.3	25.1	24.9	24.7	24.5	24.3	24.0	24.0	23.9	23.8	23.8	23.6	23.4	23.1	20.6
26.0	22.6	22.4	22.2	22.0	21.8	21.6	21.3	21.3	21.2	21.1	21.1	20.9	20.6	20.4	19.8
28.0	20.4	20.2	19.9	19.7	19.6	19.4	19.1	19.1	19.0	18.8	18.8	18.6	18.4	18.1	18.1
30.0	18.5	18.2	18.0	17.8	17.7	17.4	17.2	17.2	17.0	16.9	16.9	16.7	16.4	16.2	16.2
32.0	16.8	16.6	16.4	16.2	16.0	15.8	15.5	15.5	15.4	15.2	15.2	15.0	14.7	14.5	14.5
34.0	15.4	15.2	15.0	14.7	14.6	14.3	14.0	14.0	13.9	13.8	13.7	13.5	13.3	13.0	13.0
36.0	14.2	13.9	13.7	13.5	13.3	13.1	12.8	12.8	12.6	12.5	12.4	12.2	12.0	11.8	11.8
38.0	13.1	12.8	12.6	12.4	12.2	11.9	11.6	11.6	11.5	11.4	11.3	11.1	10.8	10.5	10.5
40.0	12.1	11.8	11.6	11.4	11.2	11.0	10.6	10.6	10.5	10.4	10.3	10.0	9.7	9.4	9.4
42.0	40.6x11.8	11.0	10.7	10.5	10.3	10.1	9.8	9.8	9.6	9.4	9.3	9.0	8.7	8.4	87
44.0		43.2x10.5	9.9	9.7	9.5	9.3	8.9	8.9	8.7	8.5	8.4	8.1	7.8	7.5	7.4
46.0			45.8x9.3	9.0	8.8	8.5	8.1	8.1	7.8	7.7	7.6	7.3	6.9	6.6	6.6
48.0				8.4	8.1	7.8	7.4	7.4	7.1	6.9	6.8	6.5	6.2	5.9	5.8
50.0				48.4x8.3	7.4	7.1	6.7	6.7	6.4	6.2	6.1	5.9	5.5	5.3	5.1
52.0					51.0x7.1	6.5	6.1	6.1	5.8	5.6	5.5	5.2	4.9	4.6	4.5
54.0						53.6x6.1	5.5	5.5	5.2	5.1	4.9	4.6	4.3	4.0	3.9
56.0							5.0	5.0	4.7	4.5	4.4	4.1	3.8	3.5	3.4
58.0							56.2x5.0	4.5	4.2	4.0	3.9	3.6	3.3	3.0	2.9
60.0								58.8x4.3	3.8	3.6	3.4	3.2	2.8	2.5	2.4
62.0									61.4x3.5	3.2	3.0	2.7	2.4	2.1	2.0
64.0										2.8	2.6	2.3	2.0		
66.0											2.3	2.0			
66.6											2.2				

NOTES:
1. The rated loads shown do not exceed 78% of tipping load with the machine on firm level ground, and are not less than 1.15 times over-front stability stipulated by the mobile crane construction standards.
2. To calculate the maximum load that can actually be lifted, deduct weight of all lifting accessories, such as main hook, from figures shown above.
3. Working radius is the horizontal distance from the swing center to the center of gravity of a lifted load.
4. Figures described as ○○×○○ in the tables indicate working radius (m) x rated load (ton).
5. The counterweight is 67.1 ton.
6. Be sure to fully extend the side frames before operating the machine.
7. Correlations between the number of hoist rope reevings, maximum rated loads, hook weights are shown in the table below.

Hook capacity (ton)	Hook weight (ton)	Maximum rated load (ton)													
		14	13	12	11	10	9	8	7	6	5	4	3	2	1
180	2.30	180.0	162.5	150.0	137.5	125.0	112.5	100.0	87.5	75.0	–	–	–	–	–
100	1.40	–	–	–	–	–	–	100.0	87.5	75.0	62.5	50.0	–	–	–
60	1.20	–	–	–	–	–	–	–	–	–	60.0	50.0	37.5	25.0	–
25	0.85	–	–	–	–	–	–	–	–	–	–	–	–	25.0	–
13	0.50	–	–	–	–	–	–	–	–	–	–	–	–	–	13.0

■ Crane Boom Construction

Elements \ Boom length (m)	18	21	24	27	30	33	36	39	42	45	48	51	54	57	60	63	66	69	72	75	78	81	84	87
Lower boom (7.5 m)	1	1	1	1	1	1	1	1	1	1	1	1	1	1	1	1	1	1	1	1	1	1	1	1
Upper boom (10.5 m)	1	1	1	1	1	1	1	1	1	1	1	1	1	1	1	1	1	1	1	1	1	1	1	1
Types of boom inserts		I	II	I	II	I	II	I	II	I	II	I	II	I	II	I	II	I	II	I	II	I	II	I
Boom insert 3 m (B)			1		1		1		1		1		1		1		1		1		1		1	
Boom insert 3 m		1		2	1	1		2	1	1		2	1	2	1	1		2	1	2	1	1		2
Boom insert 6 m						1	1	1	1	2	2	2	1	1	2	2	1	1	1	1	1	2	2	2
Boom insert 9 m													1	1	1	1	2	2	2	2	2	2	3	3
Boom insert 12 m																								
Boom mast required																								
Boom mast available																								
Boom (jib available)																								
Boom (aux. jib available)																								

Jib length 13–37 m

■ Crane Jib Construction

Elements \ Jib length (m)	13	19	25	31	37
Lower jib (5 m)	1	1	1	1	1
Upper jib (5 m)	1	1	1	1	1
Jib insert 3 m	1	1	1	1	1
Jib insert 6 m		1	2	3	4

Types of Boom Inserts

I: For crane boom

II: For crane transformed from tower crane

NOTE: When crane is transformed from tower crane by using tower boom of 66 m or longer, the following boom inserts are required.
- 66 ~ 69 m boom = 12 m x 1
- Boom of 72 m or longer = 12 m x 2

■ Working Ranges

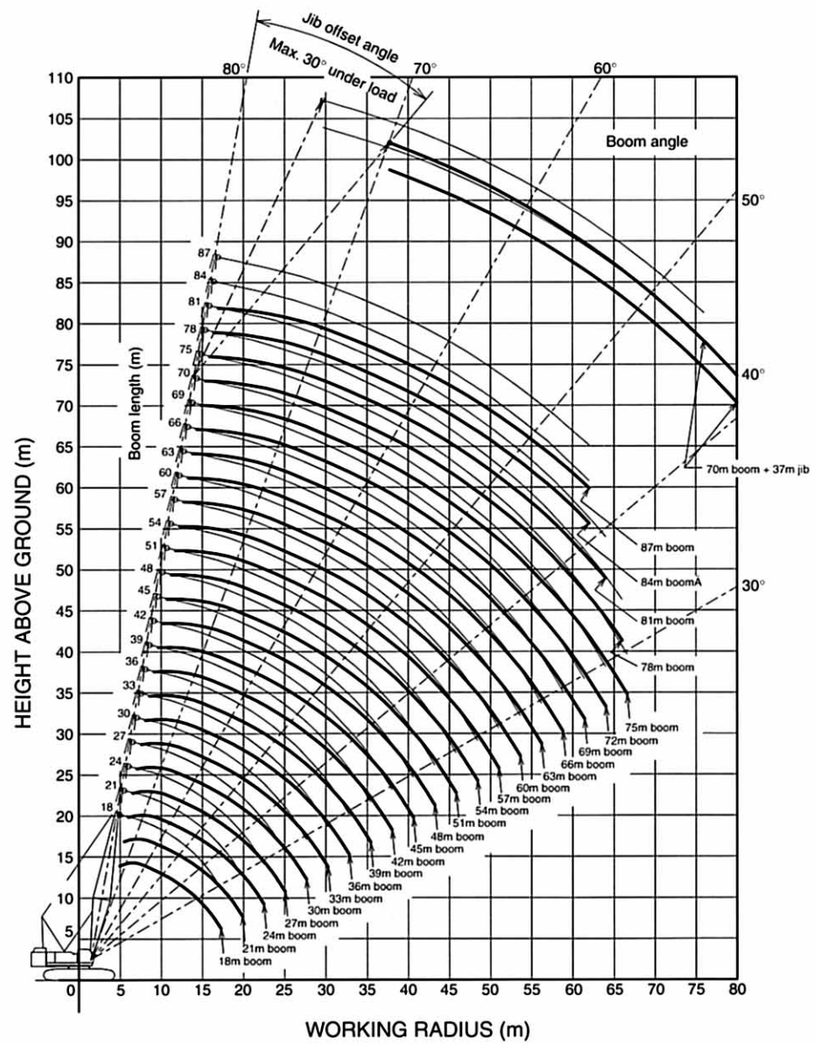

■ Component Weights and Dimensions for Transport

	Components	Weight (ton)	Quan.	Length X Width X Height (m)					Remarks
Basic machine	Basic machine	33.90	1	7.12	X	3.40	X	3.15	Excluding ropes, gantry (H, L), track beam, and self-loading device
	Basic machine	40.70	1	8.84	X	3.40	X	3.56	Including ropes, gantry (H, L), and bridle. Excluding track beam and self-loading device.
	Track beam	5.70	2	6.00	X	0.55	X	0.55	
	Side frame (one side)	19.40	2	8.67	X	1.15	X	1.39	
	Self-loading device	0.38	4	0.80	X	0.75	X	0.91	Including float
	Gantry (H)	3.60	1	7.70	X	1.67	X	0.72	Including hanger
	Gantry (L)	0.30	2	1.70	X	0.30	X	1.12	Including cylinder
	Counterweight (A)	18.00	1	4.30	X	1.79	X	0.84	
	Counterweight (B)	16.80	1	4.29	X	1.79	X	0.62	
	Counterweight (C)	5.30	1	1.33	X	1.07	X	0.70	
	Counterweight (D)	8.30	1	1.73	X	1.30	X	0.70	
	Counterweight (E)	8.30	1	1.73	X	1.30	X	0.70	
	Counterweight (F)	5.20	1	1.57	X	1.06	X	0.75	
	Counterweight (G)	5.20	1	1.57	X	1.06	X	0.75	
Crane front	Lower boom 7.5 m	3.10	1	7.72	X	2.47	X	2.50	
	Upper boom 10.5 m	3.20	1	10.94	X	2.24	X	2.29	
	Boom backstop	0.14	2	5.45	X	0.26	X	0.26	
	Bridle	0.51	1	2.10	X	0.69	X	0.33	
	Boom mast	1.54	1	10.17	X	1.36	X	1.19	
	Boom insert 3 m (A)	0.88	1	3.14	X	2.47	X	2.40	
	Boom insert 3 m (B)	1.38	1	3.14	X	2.47	X	2.59	
	Boom insert 6 m	1.22	1	6.14	X	2.47	X	2.40	
	Boom insert 9 m	1.62	1	9.14	X	2.47	X	2.36	
	Boom insert 12 m	1.92	1	12.14	X	2.47	X	2.36	
	Lower jib 5 m	0.30	1	5.11	X	1.24	X	0.97	
	Upper jib 5 m	0.45	1	5.43	X	1.24	X	1.37	
	Jib insert 3 m	0.15	1	3.08	X	1.25	X	1.09	
	Jib insert 6 m	0.26	1	6.08	X	1.25	X	1.09	
	Jib mast	0.55	1	6.14	X	1.10	X	0.62	
	Aux. jib	0.39	1	2.22	X	1.04	X	1.43	
	180 ton hook	2.30	1	2.35	X	0.92	X	0.93	
	100 ton hook	1.40	1	2.13	X	0.75	X	0.54	
	60 ton hook	1.20	1	2.12	X	0.74	X	0.35	
	25 ton hook	0.85	1	1.74	X	0.74	X	0.38	
	13 ton hook	0.50	1	1.18	X	0.47	X	0.47	

■ Standard Equipment

BASIC MACHINE

Undercarriage

- Crawler-type undercarriage (with 1 150 mm shoes)

Upperstructure

- Front lights (2 pcs)
- Rearview mirrors (left and right)
- Boom hoist drum check mirror
- Centralized lubrication system (for gantry and swing circle)
- Electric refuel device
- Ladder (right)
- Undercover (at upperstructure bottom)
- Cab climbing step
- Ultra slow speed controller
- Slow boom hoisting stop
- Constant swing speed controller
- Electric accelerator grip
- Gantry hoist cylinders
- Boom foot pin assembling device
- Drum rotation sensing system
- 67.1 ton counterweight
- Standard tool kit

Cab

- Intermittent wipers (front and roof windows)
- Washers (front and roof windows)
- Rolled sunshade (roof window)
- Sunvisor
- Air conditioner
- Floor mat
- Room light
- Auto-tuning clock radio (AM/FM)
- Cigarette lighter
- Ashtray
- Brake mode selector switch (interlocked)
- Electric tilt-type stand

Safety Devices

- Swing lock
- Drum pawl lock (main/auxiliary hoist and boom hoist)
- Swing alarm (buzzer & lamp)
- Fail safe brake system
- Pilot control shut-off lever
- * Before-work check monitor

FRONT ATTACHMENTS

Crane

- 18 m basic boom (lower 7.5 m, upper 10.5 m)
- Boom stop
- Boom angle indicator
- 180 ton hook
- Main hoist rope (ϕ28 mm x 370 m)
- Boom hoist rope (ϕ22 mm x 350 m)
- Moment limiter
- Overhoist prevention device (main hook, boom hoist, secondary)

Clamshell

- 18 m basic boom (lower 7.5 m, upper 10.5 m)
- Boom stop
- Boom angle indicator
- Open/close and suspend rope disengagement prevention device (for tubular chord boom)
- Open/close rope (ϕ28 mm x 120 m)*
- Suspend rope (ϕ28 mm x 110 m)*
- Hydraulic tagline (ϕ10 mm x 55 m rope included) and Boom hoist rope (ϕ22 mm x 350 m)

* Open/close and suspend ropes are determined based on 33 m boom length and 12 m digging depth.

These specifications are subject to change without notice.
Illustrations show the standard models, and may or may not include optional equipment, accessories, and all standard equipment.

Hitachi Construction Machinery Co., Ltd.

Head Office: Nippon Bldg., 6-2, 2-chome, Ohtemachi, Chiyoda-ku, Tokyo 100-0004, Japan
Telephone: Tokyo (03) 3245-6390
Facsimile : Tokyo (03) 3246-2609

KC-E099 Printed in Japan 98.7 (TP/TP, HT3)

SALE & RENTAL